INSTRUCTIONS FOR USE

Enterprise 8000X (E8X)

EN · ZH

Instructions for use · 使用说明书

746-585_CN.REG_02 • 10/2022

arjo
with people in mind

WARNING

To avoid injury, always read this Instructions for Use and accompanied documents before using the product.

Mandatory to read the Instructions for Use

Contents

Warnings, Cautions and Notes

⚠	**WARNING**	Indicates possible hazards in procedures or conditions which, if not correctly followed, could result in death, injury or other serious adverse reactions.
⚠	**Caution**	Indicates possible hazards in procedures or conditions which, if not correctly followed, could result in equipment damage or failure.
	NOTE	Explains or amplifies a procedure or condition.

General Warnings

WARNING

Keep these instructions in a safe place; you may need to refer to them later on.

Read and understand these instructions before operating the bed. Caregivers must be trained in the proper use of this product, its functions and controls, and any accessories.

These instructions are mandatory for the safe and effective use of this product, including the safety of patients and caregivers.

Unauthorised modifications or repairs to this product may affect its safety and will invalidate any warranty. Arjo accepts no liability for any incident, accident or reduction in performance that may occur as a result of such repairs or modifications.

To avoid the risk of electric shock, this product must only be connected to an electricity supply with a protective earth.

Do not smoke or use naked flames near this equipment and do not expose it to extremes of temperature.

Do not use electrically powered beds in the presence of flammable gases such as anaesthetic agents e.g. in operating theatres.

The bed is intended for indoor use only and should not be used outside a normal hospital environment.

Do not use accessories that have not been designed or approved for use with the bed.

The user should carry out a risk assessment before using the bed with equipment from other suppliers or manufacturers.

Always apply the brakes when the bed is stationary.

To reduce the risk of injury due to falls, lower the bed to minimum height when the patient is unattended.

Patients should not be left in the Trendelenburg position when unattended.

To reduce the risk of overbalancing, do not allow the patient to get on or off the bed when the mattress platform is in a tilted (head down or foot down) position.

WARNING

Where risk assessment indicates that a patient is at high risk of entrapment owing to their medical condition or other circumstances, and where there is no medical benefit from their being left in a contoured position, place the mattress platform in the flat position when the patient is unattended.

It is recommended to use the *Function Lockout* facility on the Attendant Control Panel to prevent unintended movement in situations where objects may press against the patient's controls.

When the bed is operated, make sure that obstacles such as feet, oxygen bottles, bedside furniture or any other objects do not restrict its movement.

To avoid potential damage or injury, do not leave oxygen bottle or any other obstacles under the bed frame while operated.

When moving or operating the bed, take care that any accessories attached to it (e.g. lifting pole) do not strike doors, ceilings, etc.

Hold the head board or foot board when pushing or pulling the bed; do not hold the side rails or any attached accessories.

Before operating the bed, make sure the patient is positioned correctly to avoid entrapment or imbalance.

Take care not to squeeze or trap trailing cables from other equipment between moving parts of the bed.

Take care not to allow clothing or bed linen to become snagged on moving parts of the bed.

This product complies with the requirements of applicable standards for electromagnetic compatibility (EMC). However, medical electrical equipment requires special precautions regarding EMC and should be installed and used in accordance with the EMC information in the product service manual.

Medical electrical equipment can be affected by portable and mobile radio frequency communications equipment, e.g. cellular telephones.

If a serious incident occurs in relation to this medical device, affecting the user, or the patient then the user or patient should report the serious incident to the medical device manufacturer or the distributor. In the European Union, the user should also report the serious incident to the Competent Authority in the member state where they are located.

1. Introduction

These instructions contain information for the installation, use and maintenance of the Arjo Enterprise® 8000X acute care hospital bed. These beds have multiple functions to provide the optimum nursing position for both patient and caregiver.

Standard features:

- Folding split side rails with integrated controls
- Electrical adjustment of bed height and leg section elevation
- Electrically operated retracting backrest
- Bio-Contour® advanced profiling system
- Auto-Chair facility
- Electrical adjustment of head down tilt (Trendelenburg) and foot down tilt (reverse Trendelenburg)
- Manual selection of calf section vascular position
- Mattress support surface with removable panels
- Adjustable length mattress platform
- Drainage bag rails
- Underbed lights
- 125mm single wheel castors
- Curved platform sections

Optional features:

- 150mm (single or dual wheel) castors
- Bedstripper (linen shelf)
- 5th Wheel
- DIN accessory rails
- Lockable foot board and head board
- Full width brake bar
- Radio translucent backrest with X-ray cassette tray
- IndiGo™ Intuitive Drive Assist
- Foot-end mounted Attendant Control Panel (ACP)
- Flat deck sheets

Optional features are specified by the customer at the time of ordering. The chosen options are indicated by the equipment model number.

The model number **REF** and serial number **SN** can be found on the specification label; this is located on the bed frame below the head board.

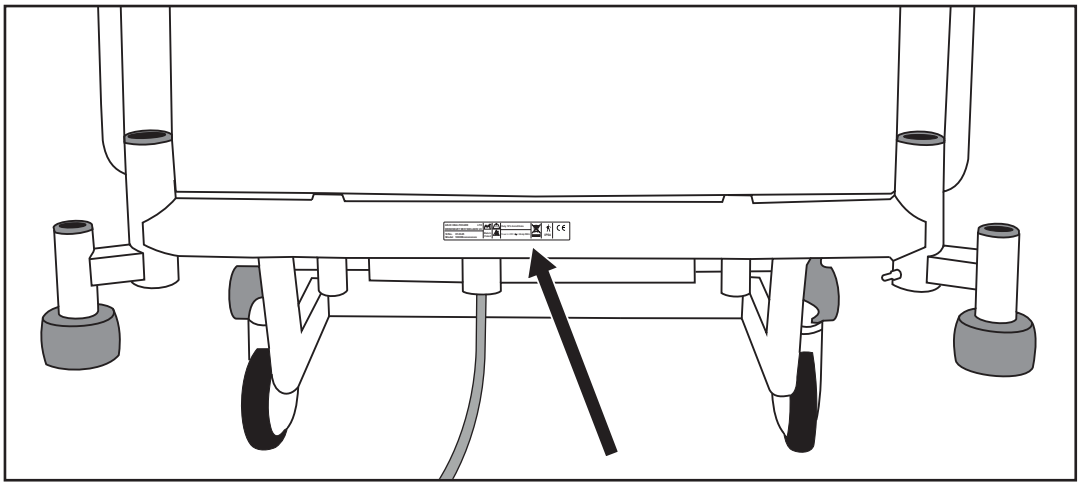

Specification label

Caution

Before using the bed, ensure that the “Power in” rating on the specification label is compatible with the local electricity supply.

Product overview

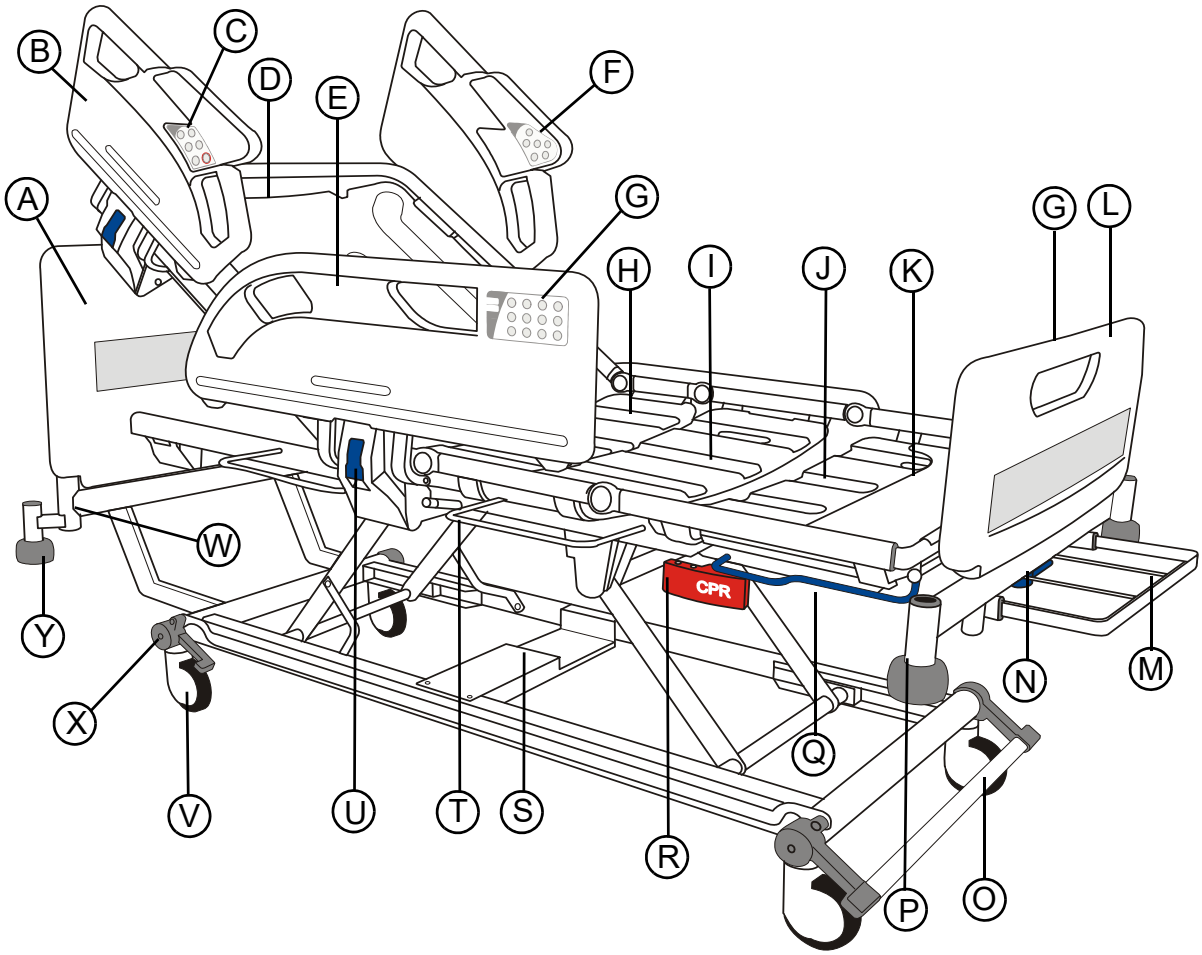

A. Head board

B. Head end side rail

C. Caregiver controls

D. Backrest section

E. Foot end side rail

F. Patient controls

G. Attendant Control Panel (ACP)

H. Seat section

I. Thigh section

J. Calf section

K. Calf extension sheet

L. Foot board

M. Bedstripper (linen shelf) (Optional)

N. Extension locking handle

O. Brake pedal / bar (Optional)

P. Accessory socket

Q. Extension catch bar

R. CPR release handle

S. Place for 5th Wheel (Optional, see page 18)

T. Drainage bag rail

U. Side rail release lever

V. Castor

W. Lifting pole socket

X. Head end brake pedal (Optional)

Y. Roller buffer

NOTE
Flat deck sheets are supplied as standard when the backrest with X-ray cassette tray is present.

2. Clinical Applications

WARNING

To ensure the patient can use the bed safely, their age and condition should be assessed by a clinically qualified person.

The use of head down tilt (Trendelenburg) or foot down tilt (reverse Trendelenburg) may be contraindicated for certain medical conditions. The tilt facility should only be used under the guidance of a clinically qualified person after assessment of the patient's condition.

Intended use

This product is intended to provide support to patients during a stay in hospital or other care facility and allows positioning for CPR and Trendelenburg.

The bed is suitable for use in the following situations:

- Intensive/critical care provided in a hospital where 24-hour medical supervision and constant monitoring is required, e.g. ITU, ICU and CCU (*Application Environment 1).
- Acute care provided in a hospital or other medical facility where medical supervision and monitoring is required, e.g. general medical and surgical wards (*Application Environment 2).
- Long term care in a medical area where medical supervision is required and monitoring is provided if necessary, e.g. nursing homes and geriatric facilities (*Application Environment 3).

* Application Environments are defined in IEC 60601-2-52.

Indications

The bed is appropriate for high dependency patients who pose a movement and handling risk and / or whose clinical condition requires that they are positioned with minimal physical handling.

Patients with a moderate amount of independence can, at the caregiver's discretion, use the controls to adjust their own position.

The mattress platform can be positioned to assist with such clinical procedures as may be required in the Application Environments defined above.

Contra-indications

The bed is not suitable for use in the following situations:

- A domestic area, i.e. home healthcare (*Application Environment 4).
- Outpatient care (*Application Environment 5).

* Application Environments are defined in IEC 60601-2-52.

The bed is not suitable for patients under 40kg in weight.

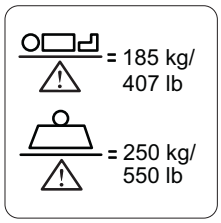

The maximum recommended patient weight is 185kg.

The safe working load (SWL) of the bed is 250kg.

The safe working load is calculated as follows (in accordance with IEC 60601-2-52):

Maximum patient weight..... 185kg

Mattress 20kg

Accessories (including attached loads)..... 45kg

TOTAL 250kg

WARNING

If the combined weight of the mattress and accessories exceeds 65kg, the maximum patient weight must be reduced accordingly.

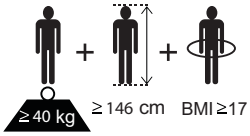

The recommended patient size is; weight equal or above 40kg, height between 146cm and 190cm and BMI equal or above 17.

At the discretion of the carer, patients taller than 190cm may be accommodated by extending the bed - refer to "Bed length adjustment" on page 24. Ensure that the patient's height does not exceed the "In-bed length" shown on page 50.

3. Installation

The following chapter describes how to install the bed.

WARNING

If the power supply cord or plug is damaged, the complete assembly must be replaced by authorised service personnel. Do not remove the fitted plug, or use a rewireable plug or adapter.

Make sure the power supply cord is not stretched, kinked or crushed.

Do not allow the power supply cord to trail on the floor where it may cause a trip hazard.

Make sure the power supply cord does not become entangled with moving parts of the bed or trapped between the bed frame and head board.

Disconnect the power supply cord from the electricity supply, and store it as shown, before moving the bed.

Caution

Before the first use, or if the bed has been unused for more than three months, connect the bed to the electricity supply for at least 24 hours to allow the backup battery to recharge fully; failure to do this may reduce the life of the battery. After charging, check that the battery is fully serviceable by carrying out a battery test as shown on page 45.

Electricity supply

Connect the mains plug to a suitable socket outlet. Make sure the plug is easily accessible so it can be disconnected quickly in an emergency.

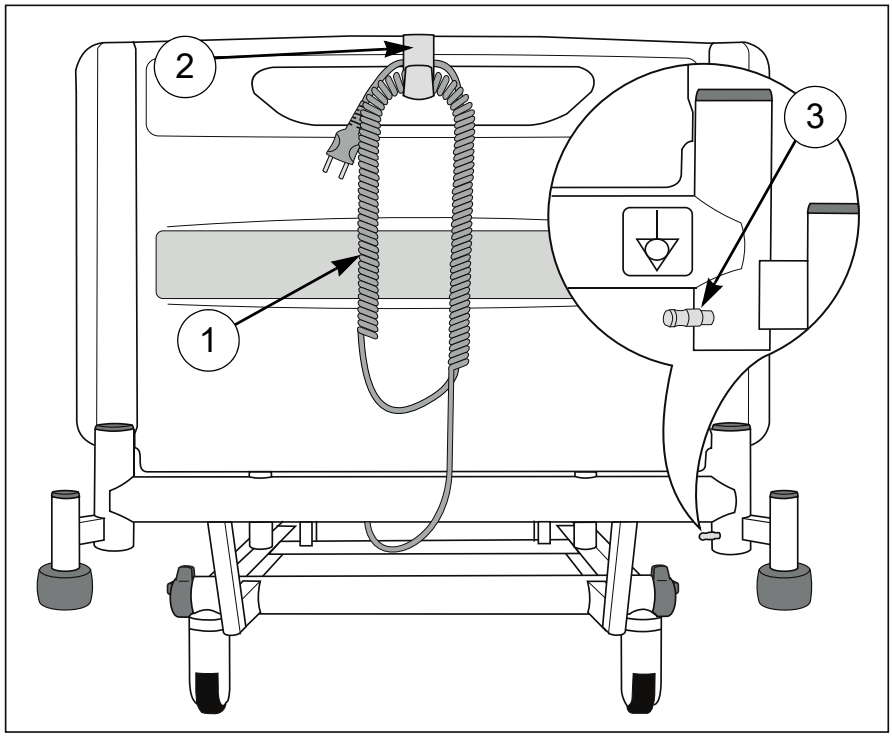

Power supply cord and potential equalisation terminal

When the bed is connected to the electricity supply, an indicator will light on the Attendant Control Panel (see page 34).

The power supply cord (**1**) is fitted with a plastic hook (**2**). When not in use or before moving the bed, clip the hook onto the head board, coil up the cable and place it over the hook as shown.

To isolate the bed from the electricity supply, disconnect the mains plug from the socket outlet.

A potential equalisation terminal (**3**) is located at the head end of the bed.

When other electrical equipment is within reach of the patient or caregiver, potential differences between the equipment can be minimised by connecting together their potential equalisation terminals.

Underbed light

The underbed light illuminates the floor on either side of the bed.

The underbed light is always on unless the bed is in its low power state; refer to the section "Low power mode" on page 39.

Mattresses

WARNING

Always use a mattress of the correct size and type. Incompatible mattresses can create hazards.

Entrapment hazards may exist when using a very soft mattress, even if it is the correct size.

The maximum recommended mattress thickness for use with side rails is 18cm.

Read the instructions for use supplied with the mattress.

Where the maximum patient weight specified for the mattress is different to that specified for the bed, the lower value applies.

A label on the calf extension sheet indicates the correct mattress size:

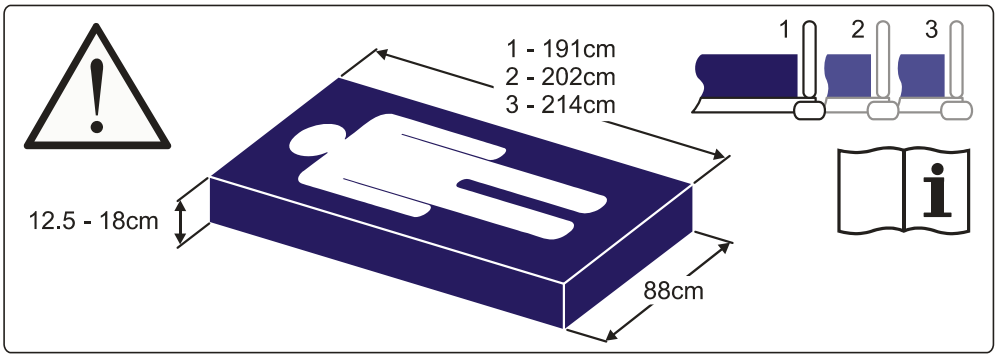

Mattress size label

NOTE
The numbers 1, 2 and 3 on the label indicate different mattress platform lengths; refer to **Bed length adjustment** on page 24.

Mattresses and side rails

When choosing bed and mattress combinations, it is important to consider the use of side rails based on clinical assessment of each individual patient and in line with local policy.

When assessing the suitability of a mattress for use with side rails, the following factors should be considered:

- The bed is designed to provide an acceptable side rail height when used with a foam mattress up to 18cm thick.
- Specialist powered air / foam replacement mattresses will typically envelop the patient when loaded and can generally be deeper than a foam mattress without compromising safety. Other makes of specialist mattress replacement must be assessed individually prior to use to verify sufficient clearance is maintained.
- Mattress overlays are not recommended for use with this bed.
- To ensure compliance with IEC 60601-2-52, an approved Arjo mattress should be used. Compliance with this standard when using other mattresses must be validated by the user.
- For more information on suitable mattresses and mattress replacements, contact your local Arjo office or approved distributor. A list of Arjo offices can be found at the back of this manual.

4. Operation

The following chapter describes how to operate the bed.

WARNING

Operate the brake pedals with your feet while wearing suitable shoes. Do not operate the pedals with your hands.

Brakes and steering

The pedals have three positions as shown below:

- **BRAKE**: brakes are applied on all four castors.
- **FREE:** all four castors are free to rotate and swivel.
- **STEER**: all four castors can rotate, but the steering castor (see below) is locked so that it cannot swivel. This helps to keep the bed on a straight line.

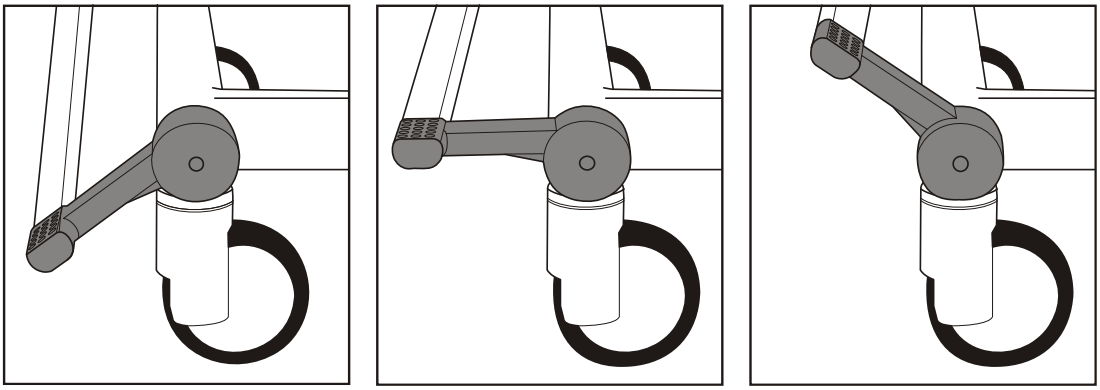

BRAKE **FREE** **STEER**

Brake pedal bar

The brake pedals at the foot end of the bed can be linked by a full width bar.

Using the steering castor

Position the bed so that all the castors line up in the direction of travel. Raise the pedals to lock the steering castor and move the bed by pushing it from the opposite end.

NOTE
The steering castor may be at either end of the bed, as specified by the customer.

NOTE
Brake pedal appearance may alter slightly on actual product, but functionality and user instructions remains unchanged.

Head end brake pedals

Brake pedals (**1**) are fitted at the head end of the bed. These operate in the same way as the foot end pedals.

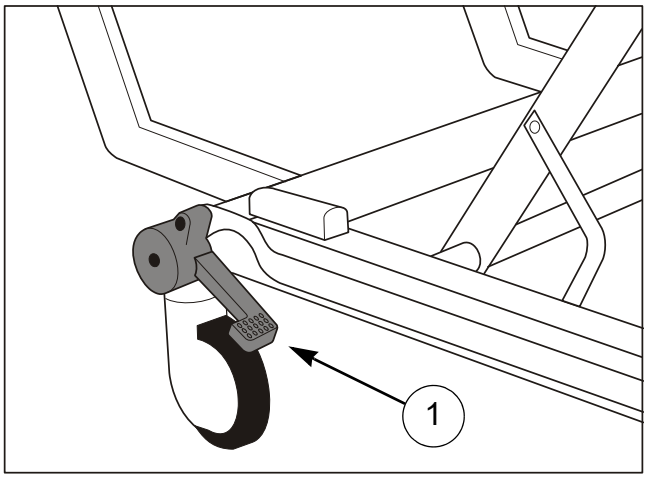

Head end brake pedal

How to use the 5th Wheel (Optional)

The 5th wheel provides improved mobility and steering.

Activate 5th Wheel:

1. Step down on the head end of the 5th wheel activation pedal (A). **(See Fig. 1)**
   The 5th wheel (B) will lower until it has contact with the floor.
2. Check that the brakes are unlocked and the brake pedal is in the “Free” position. **(See Fig. 2)**
3. The bed is ready for movement.

Deactivate 5th Wheel:

1. Step down on the foot end of the 5th wheel activation pedal (A). **(See Fig. 1)**
2. Make sure the 5th wheel (B) is raised from the floor.

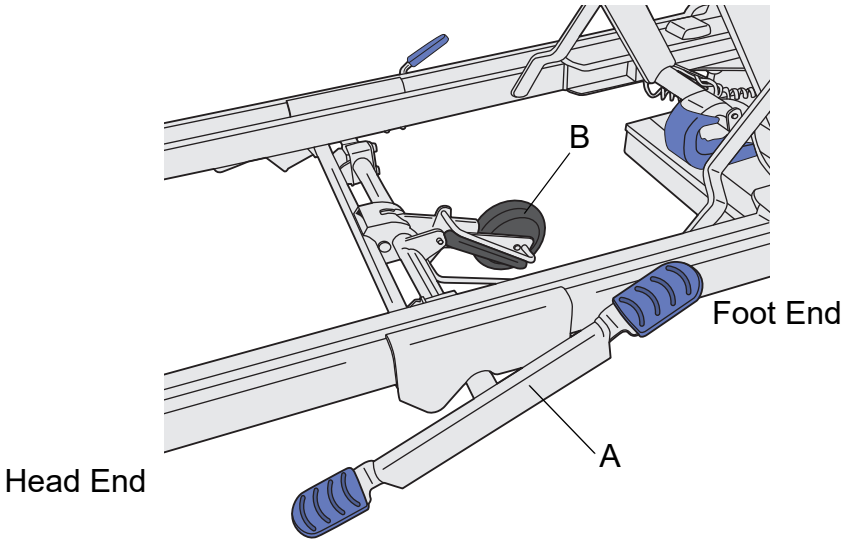

Fig. 1 - 5th wheel activation pedal

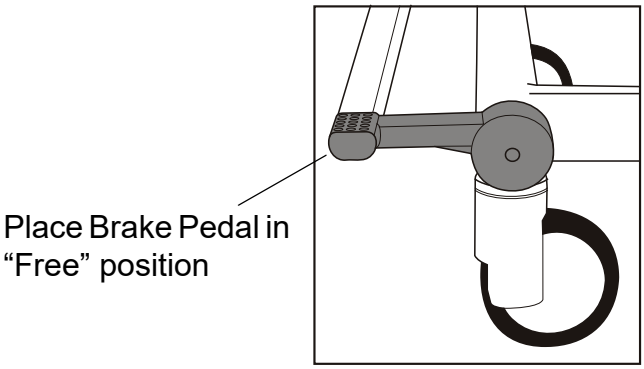

Fig. 2 - Free Position

Side rails

WARNING

The clinically qualified person responsible should consider the age, size and condition of the patient before allowing the use of side rails.

Side rails are not intended to restrain patients who make a deliberate attempt to exit the bed.

Ensure that the mattress is suitable for use with side rails - see *Mattresses and side rails* on page 15.

To prevent possible entrapment, make sure the patient's head and limbs are clear of the side rails when adjusting the mattress platform.

Side rail contact points are identified by this symbol. Keep hands and fingers away from these areas.

To lower the side rail:

Hold either side rail handle (**1**). Pull the blue release lever (**2**) and lower the side rail (**3**), holding the side rail until it is completely lowered. The side rail folds down below the mattress platform.

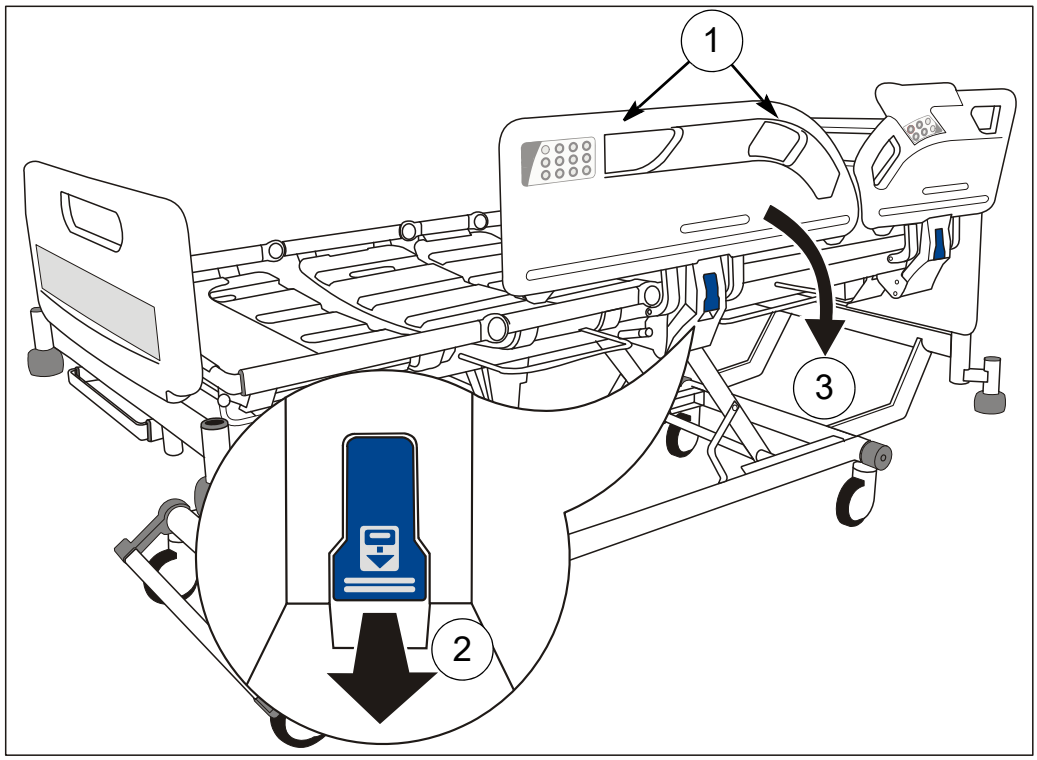

Side rail operation

NOTE
The head end and foot end side rails operate in the same way.

To raise the side rail:

Hold either side rail handle (**1**). Pull the side rail up and away from the bed until it locks in the raised position.

WARNING

Make sure the locking mechanism is securely engaged when the side rails are raised.

CPR backrest release

Manual CPR release handles are located below the calf section on either side of the bed.

If the patient suffers a cardiac arrest, pull the CPR release handle (**1**). This will lower the backrest (**2**) to enable cardio-pulmonary resuscitation to be carried out.

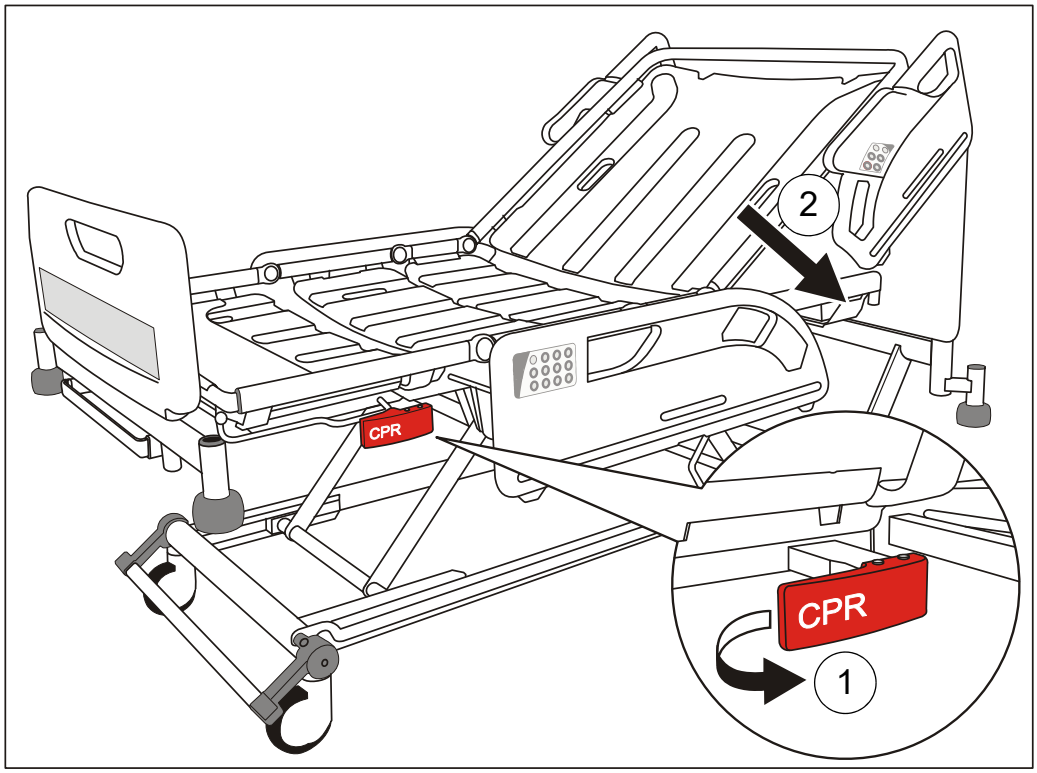

CPR backrest release

WARNING

The backrest can fall quickly; keep hands clear to avoid trapping.

Caution

The manual CPR release should only be used in an emergency; repeated everyday use can cause premature wear.

X-ray cassette tray (Optional)

The X-ray cassette tray allows thoracic X-ray photography with the backrest at any angle and without the patient moving from the bed.

WARNING

Position the mattress platform at an ergonomic height to allow easy loading and removal of X-ray cassettes.

Return the X-ray cassette tray to its closed position below the backrest before raising or lowering the backrest.

Do not sit or place heavy objects on the X-ray cassette tray.

Ensure the X-ray cassette tray is held securely in place by the catch at all times.

Operation

Apply the brakes. Remove the head board from the bed.

Pull the knob (1) to release the catch and slide the tray out (2) as far as will go.

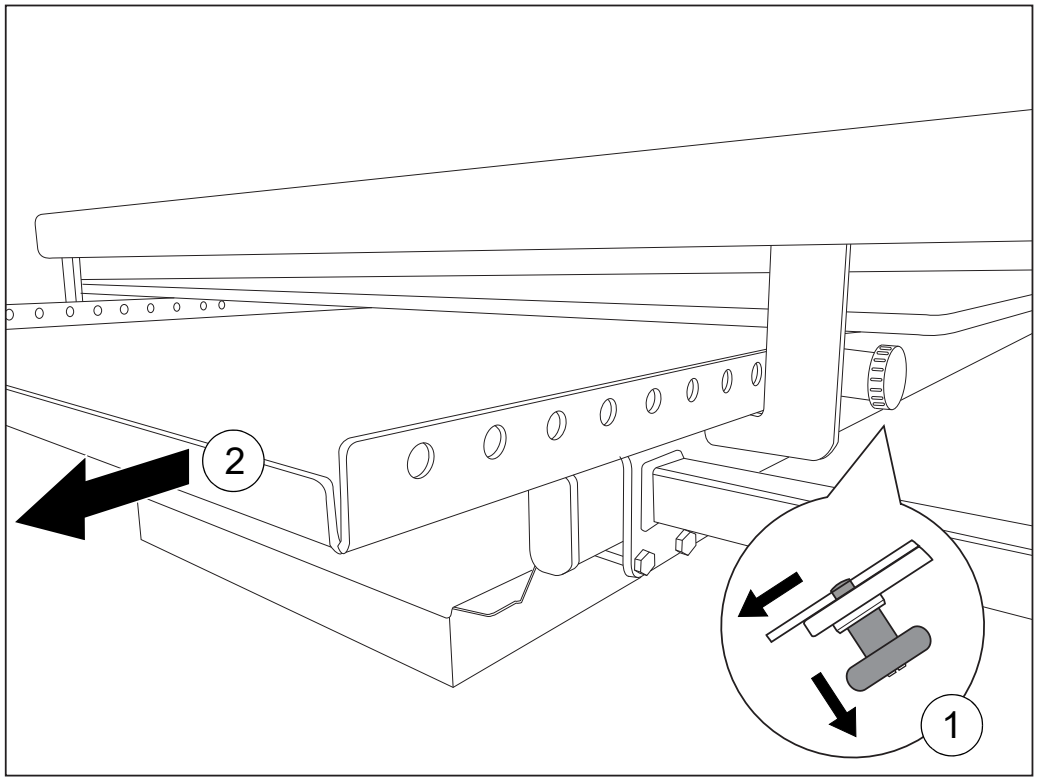

X-ray cassette tray operation

Release the knob to hold the tray in the fully open position (3). Position the X-ray cassette (4) on the tray with its bottom edge against the lip at the foot end of the tray.

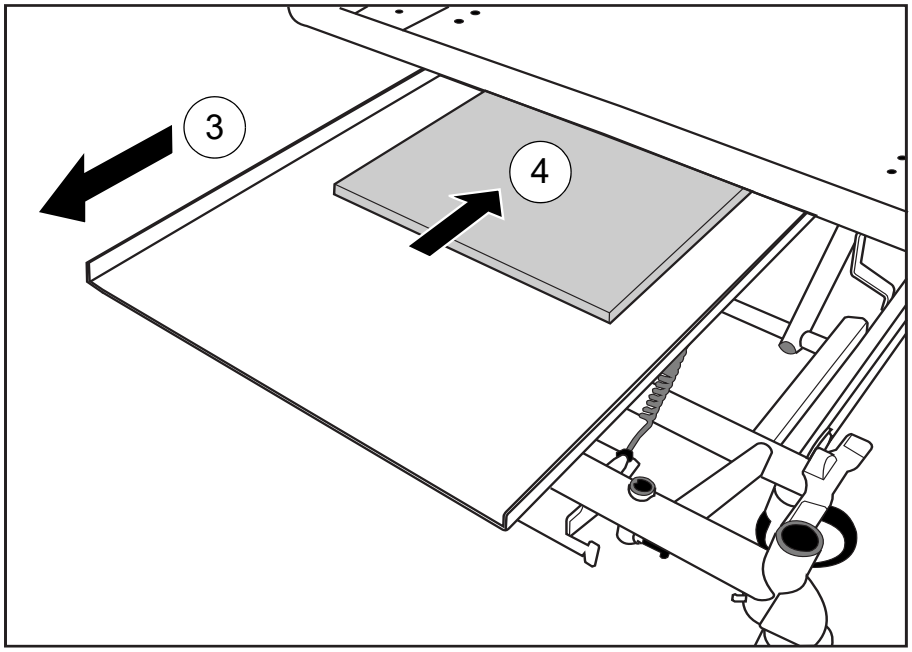

Positioning the X-ray cassette

Pull the knob and slide the tray underneath the backrest.

The red moulding on the top of the X-Ray sitting tool indicates the top right hand corner of the X-Ray cassette. Use this feature to assist in accurate positioning.

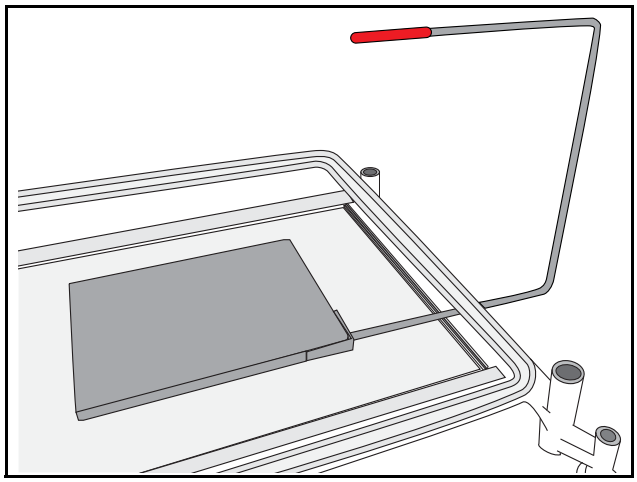

X-Ray Sitting Tool

Release the knob to hold the tray in one of the latching positions.

After use, pull the tray out to the fully open position and remove the X-ray cassette. Return the tray to the closed position below the backrest and replace the head board.

Bed length adjustment

The length of the bed is adjustable to three set positions. These are typically used as follows:

1 Short, for manoeuvring the bed in confined spaces

2 Standard length, for normal use

3 Extended, to accommodate very tall patients

WARNING

Install a suitable foam mattress extension (squab) at the head end when the bed is extended.

Always adjust the bed frame and mattress platform to the same length and make sure both are latched securely in position.

Level the mattress platform before adjusting the bed length.

Take care not to pinch your fingers when lifting the catch bar.

To extend the bed frame:

Pull the blue extension locking handle (**1**). Pull out the bed frame (**2**) to the required position and release the handle.

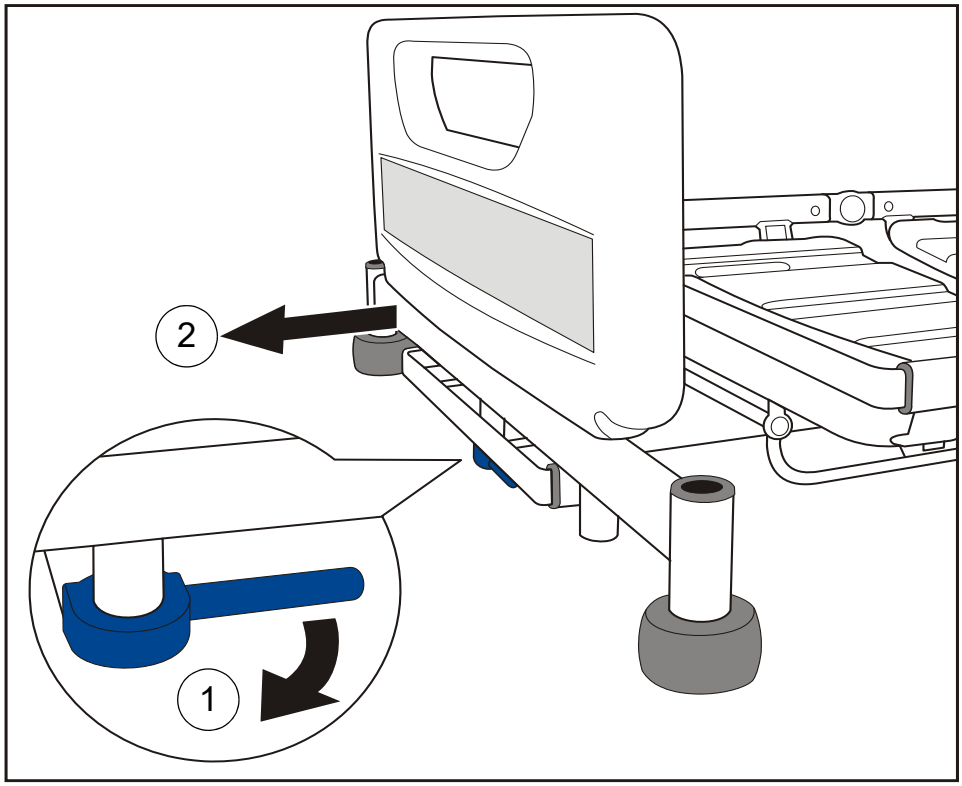

Extending the bed frame

To extend the mattress platform:

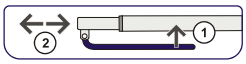

Lift the blue extension catch bar (**1**). Hold the middle of the end crossbar (**2**) and pull out the mattress platform to the required position. Release the catch bar.

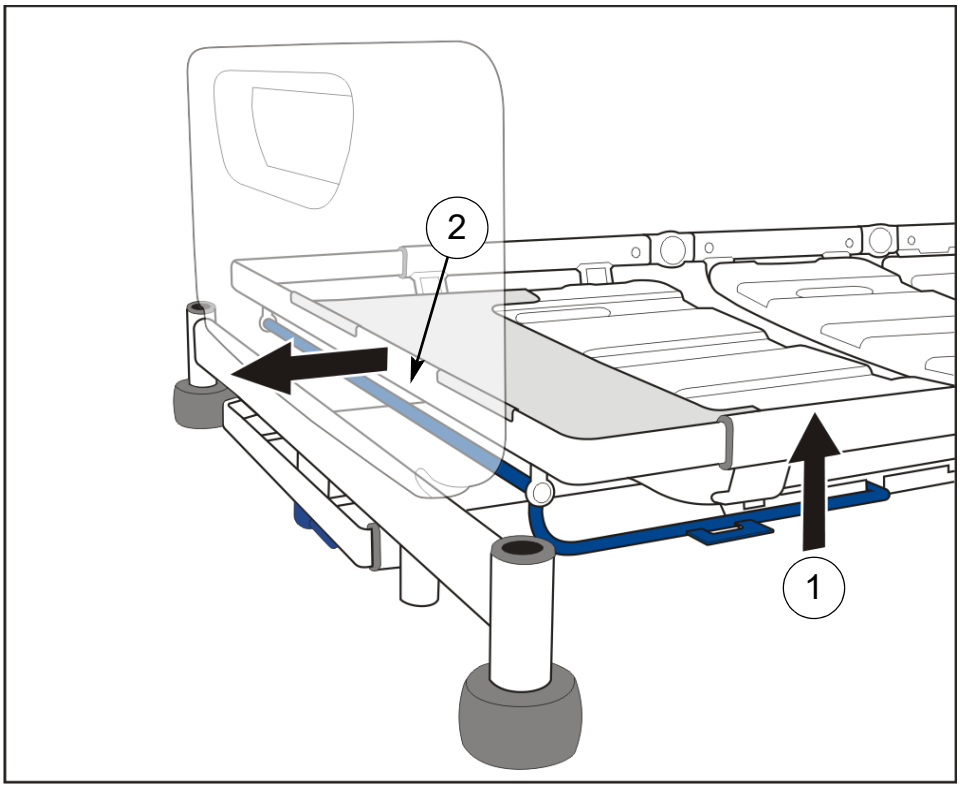

Extending the mattress platform

WARNING

After extending the mattress platform make sure the calf extension sheet is clipped over the end of the mattress platform frame.

To shorten the bed:

Reverse the above procedure.

Bedstripper (linen shelf) (Optional)

The bedstripper is used for supporting clean linen when the bed sheets are being changed.

Pull out the bedstripper from its closed position below the foot board.

After use, push the bedstripper back to its closed position.

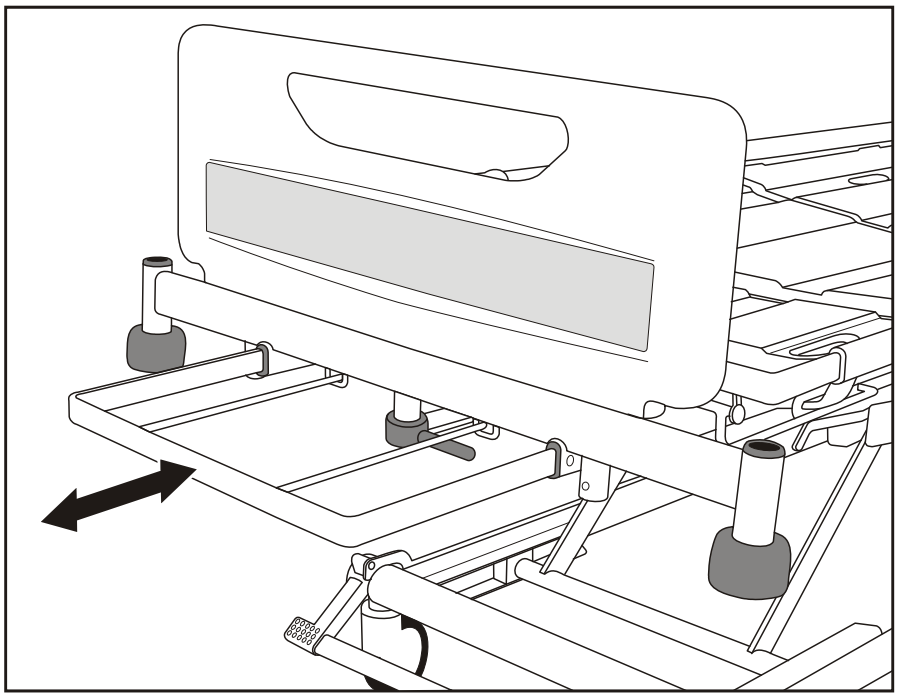

Bedstripper (linen shelf)

Caution

The safe working load of the bedstripper is 20kg.

Level the mattress platform before using the bedstripper.

Lifting pole and accessory sockets

Lifting pole sockets (**1**) are located at the head end of the mattress platform.

Sockets to support compatible accessories are located at the head end (**2**) and foot end (**3**) of the bed.

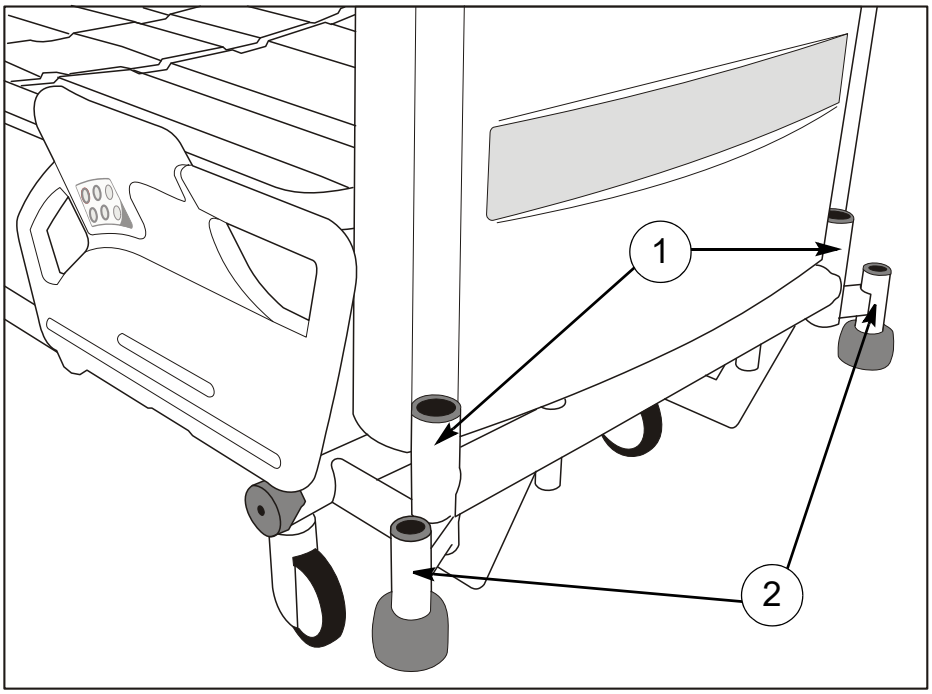

Lifting pole and accessory sockets (head end)

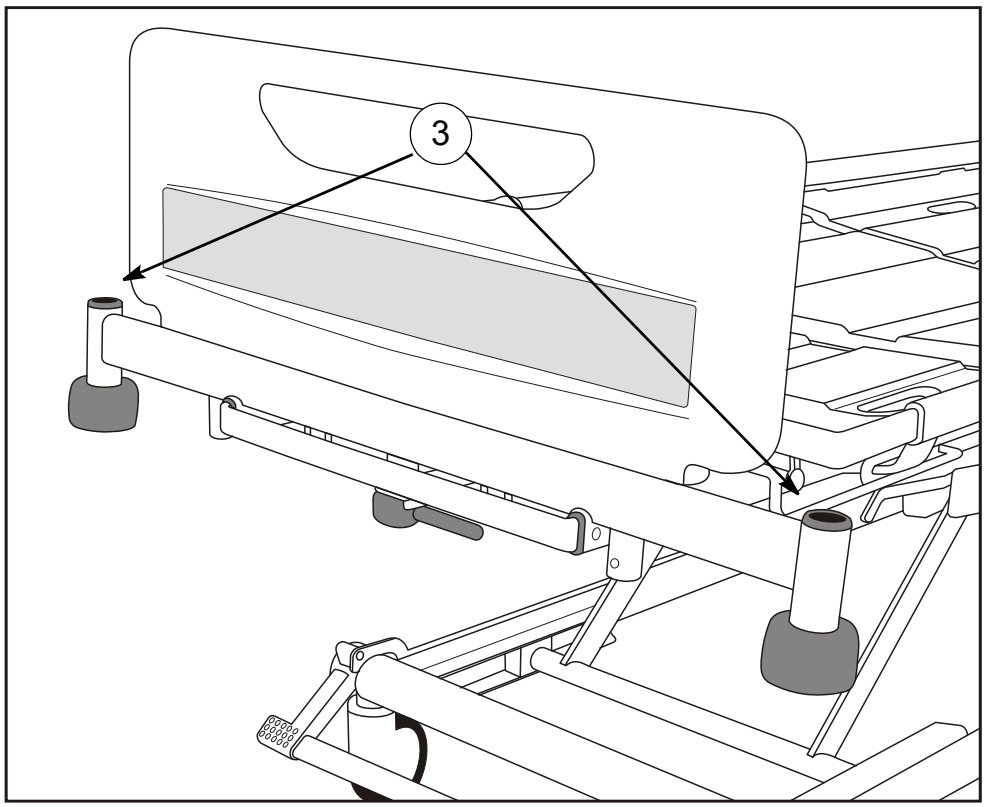

Accessory sockets (foot end)

Drainage bag rails

Rails (**1**) to support drainage bags, etc. are located below the thigh and backrest sections on either side of the bed.

(Optional) The bed may also be fitted with DIN accessory rails (**2**).

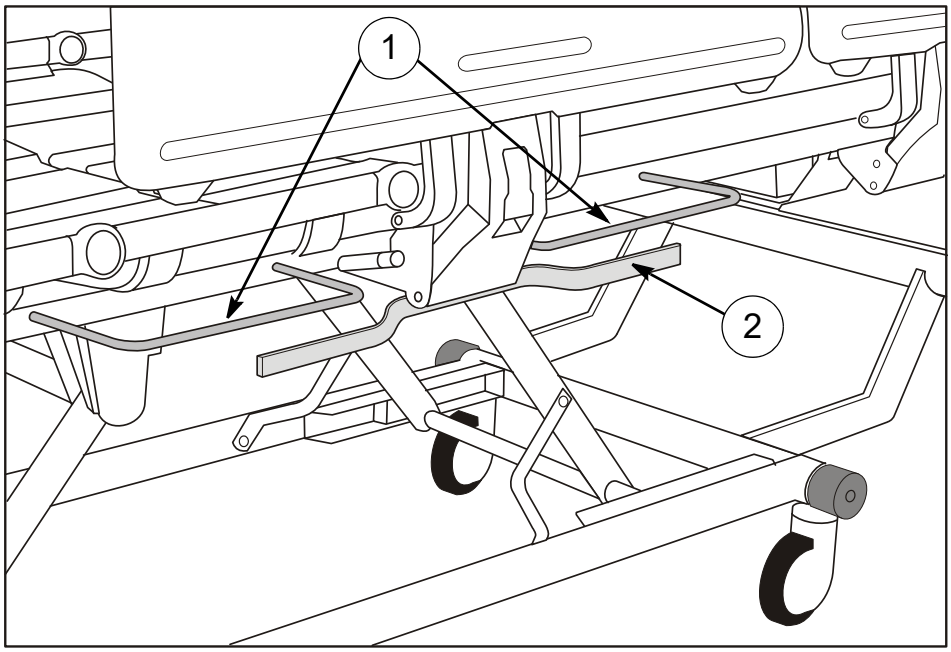

Drainage bag rails and DIN rail

Caution

The maximum weight that can be safely supported by each drainage bag rail and DIN rail is 5kg.

Head and foot boards

The head and foot boards can be easily lifted off the bed for access to the patient.

(Optional) The head and foot boards can each be fitted with locking catches (**1**) to prevent accidental removal. **To unlock a board:** pull out the catches (**2**) and rotate them a quarter-turn (**3**); the board can now be lifted off the bed.

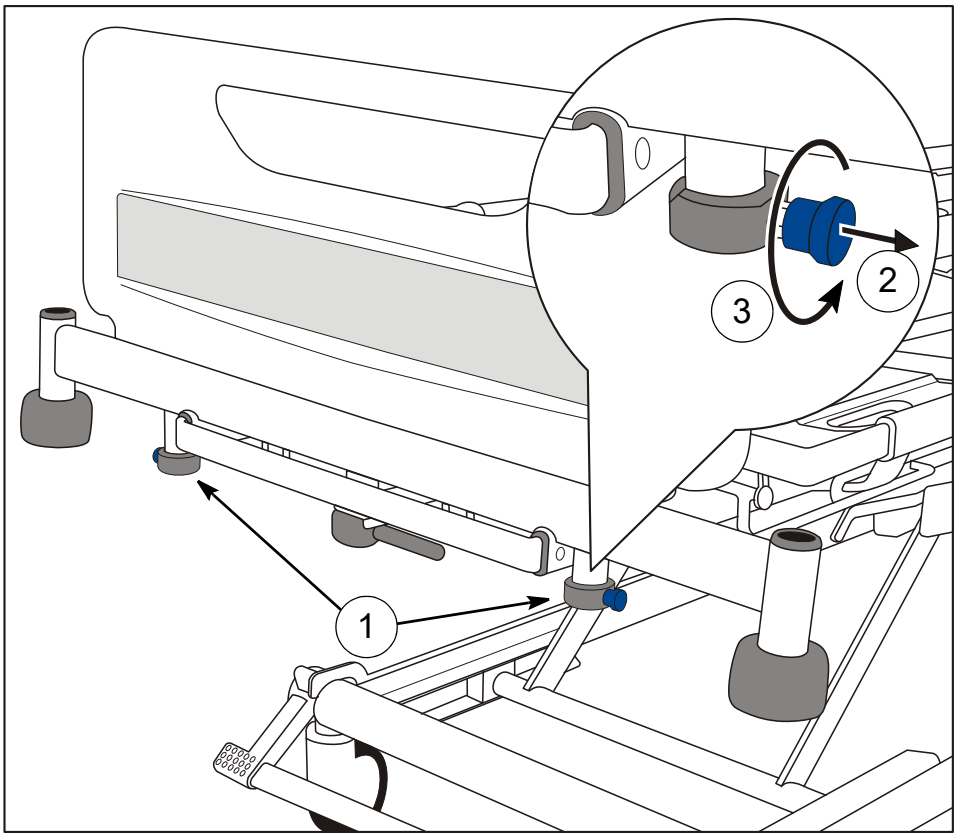

Locking foot board (foot end shown in this example)

After replacing a board on the bed, rotate the catches until they spring back into the locked position.

Adjusting the mattress platform

WARNING

The controls require only a single press to activate. To prevent unwanted movement of the mattress platform, avoid leaning against the side rails and keep equipment on and around the bed clear of the controls.

To avoid potential damage or injury, do not leave oxygen bottle or any other obstacles under the bed frame while operated.

Controls for use by the patient and caregiver are built into the head end side rails. These operate the bed's basic functions. For patients who find it difficult to use the side rail controls, a separate handset is available as an optional extra.

An Attendant Control Panel (ACP) for use only by the caregiver is built into the foot end side rails. This provides full control of all the bed's functions.

The functions of the patient and caregiver controls, and the ACP, are described over the next few pages.

To adjust the mattress platform: press and hold the appropriate button until the required position is achieved. Movement will continue until the button is released or the limit of travel is reached.

NOTE
If a warning tone (beep) sounds when pressing a button, this indicates that the bed is operating on the backup battery - refer to the section **Backup battery** on page 38.

NOTE
If a button is held down for more than 90 seconds, the function will be automatically inhibited until the button is released. The function must then be unlocked as described in the section **Function lockout** on page 36.

Patient controls

The patient controls are located on the inside panel of both head end side rails.

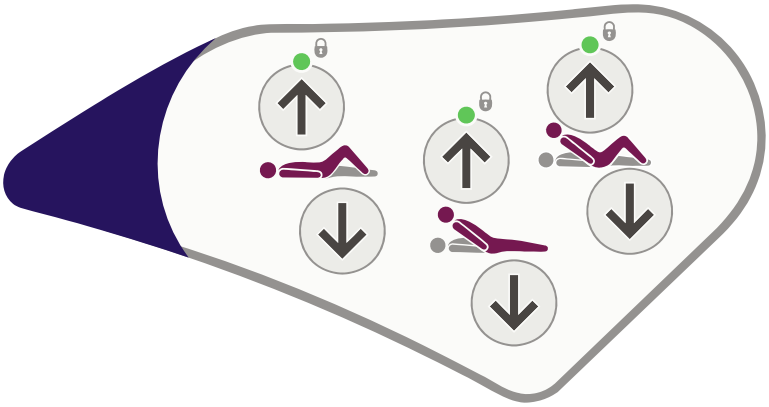

Patient controls (patient's left hand side)

> **WARNING**
>
> **The patient should be shown how to use these controls by the caregiver.**

Caregiver controls

The caregiver controls are located on the outside panel of both head end side rails.

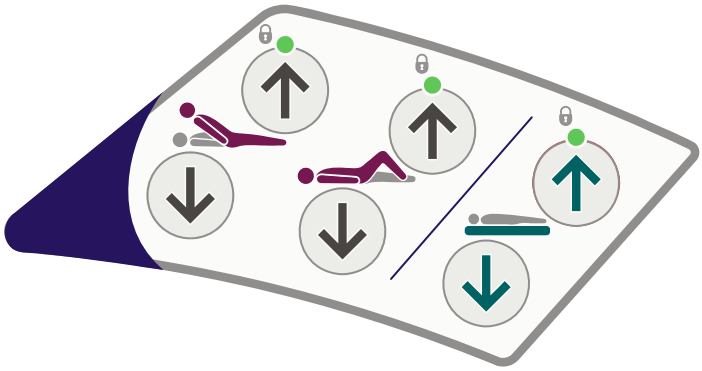

Caregiver controls (patient's right hand side)

Thigh section

These buttons raise and lower the thigh section.

When the thigh section is first raised from the flat position, the calf section will be in the Fowler position (angled downwards).

To change the calf section to the vascular (horizontal) position, refer to the section **Adjusting the calf position** on page 37.

Backrest angle

These buttons raise and lower the backrest.

Bio-Contour

The *Bio-Contour up* button simultaneously raises the backrest and thigh sections to provide upright patient profiling; the raised thigh section prevents the patient sliding down the bed.

The *Bio-Contour down* button returns the mattress platform to a flat position.

Mattress platform height

These buttons raise and lower the mattress platform.

When the mattress platform is lowered to 38cm* above the floor, it will pause then continue to lower until it reaches its minimum height.

(* 40cm on beds with 150mm castors.)

WARNING

At minimum height, clearance underneath the bed is reduced. Keep your feet away from the areas below the side rails and take extra care when using patient hoists or similar equipment.

To avoid potential damage or injury, do not leave oxygen bottle or any other obstacles under the bed frame while operated.

Patient handset (Optional)

The controls on this handset operate in the same way as those on the side rails (see page 32).

WARNING

Store the handset on the side rail using the clip on the back; this will help to prevent accidental operation of the controls.

The patient should be shown how to use the handset by the caregiver.

Take care not to squeeze or trap the handset cable between moving parts of the bed.

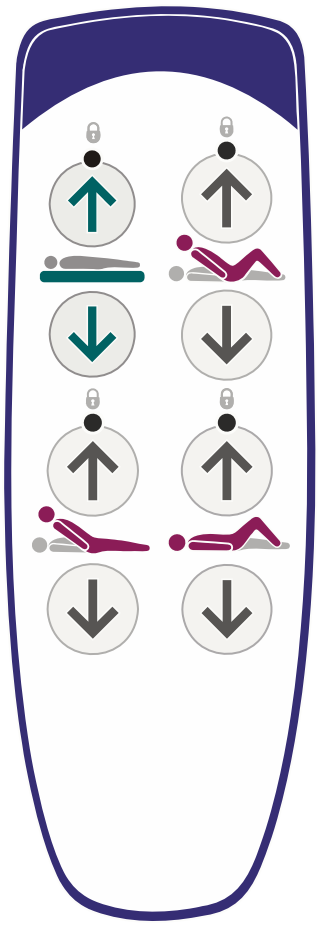

Patient handset

NOTE
On some models the patient handset does not have mattress platform height, backrest or thigh section controls.

Attendant Control Panel (ACP)

Attendant Control Panels are located on the outside panels of both foot end side rails. The ACP on the left side and right side of the bed have different button layouts. Additionally, an ACP can be mounted at the foot-end of the bed, either clipped onto the foot board or using an ACP holder (ENT-ACC11) in an accessory socket. The foot-end mounted ACP has the same button layout as the right side rail mounted ACP.

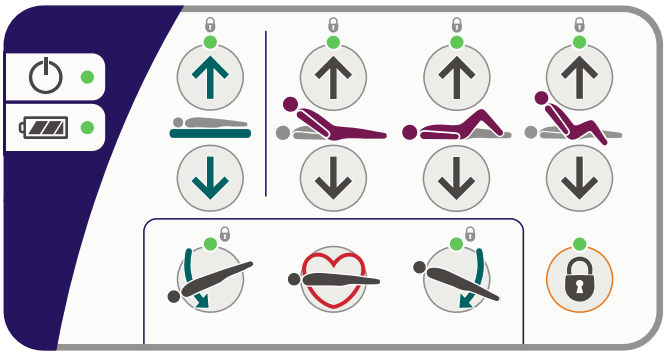

Attendant Control Panel (patient's right hand side)

Power on indicator - lights when the bed is connected to the electricity supply.

Battery indicator - refer to the section **Backup battery** on page 38.

Mattress platform height

These buttons raise and lower the mattress platform.

When the mattress platform is lowered to 38cm* above the floor, it will pause then continue to lower until it reaches its minimum height.

(* 40cm on beds with 150mm castors.)

WARNING

At minimum height, clearance underneath the bed is reduced. Keep your feet away from the areas below the side rails and take extra care when using patient hoists or similar equipment.

To avoid potential damage or injury, do not leave oxygen bottle or any other obstacles under the bed frame while operated.

Backrest

These buttons raise and lower the backrest.

The backrest will pause when it reaches an angle approximately 30º above the horizontal.

Thigh section

These buttons raise and lower the thigh section.

When the thigh section is first raised from the flat position, the calf section will be in the Fowler position (angled downwards).

To change the calf section to the vascular (horizontal) position, refer to the section **Adjusting the calf position** on page 37.

Auto-Chair

The *Auto-Chair up* button simultaneously raises the backrest and thigh sections, pausing when the backrest reaches 45º. Continue to hold the up button to lower the foot end of the mattress platform into a chair position.

If the backrest angle is greater than 45º, it will return to 45º to prevent the patient from tipping forwards.

The *Auto-Chair down* button returns the mattress platform to a flat and level position.

Tilt angle

This button lowers the head end of the mattress platform (Trendelenburg position).

This button lowers the foot end of the mattress platform (reverse Trendelenburg position).

NOTE
When returning from a tilted position, the mattress platform will pause at the level (no tilt) position.

CPR position

If the patient suffers a cardiac arrest, press and hold the CPR button. This will flatten the mattress platform (and lower it if necessary) to enable cardio-pulmonary resuscitation to be carried out.

The CPR button overrides the function lockout settings.

Function lockout

Function lockout can be used to prevent operation of the controls, e.g. when inadvertent movement of the mattress platform could injure the patient.

To lock (prevent) or unlock (allow) functions:

Press the Function Lock button. The indicator above the button will light.

Press the ACP button(s) corresponding to the function(s) to be locked or unlocked. The “lock” indicator LED above each function button shows its current status:

LED on = function locked
LED off = function unlocked.

When all functions are locked or unlocked as required, press the Function Lock button again or wait for five seconds. The indicator above the Function Lock button will go out and the lockout settings are stored.

NOTE
When a function is locked, any associated functions are automatically disabled, e.g. locking the backrest also disables Bio-Contour and Auto-Chair.

NOTE
Function lockout settings are retained if the bed is disconnected from the electricity supply.

Adjusting the calf position

When the thigh section is raised, the calf section can be manually changed to the vascular (horizontal) position.

Hold the side of the calf section frame. Lift the calf section upwards (**1**) until it latches (**2**).

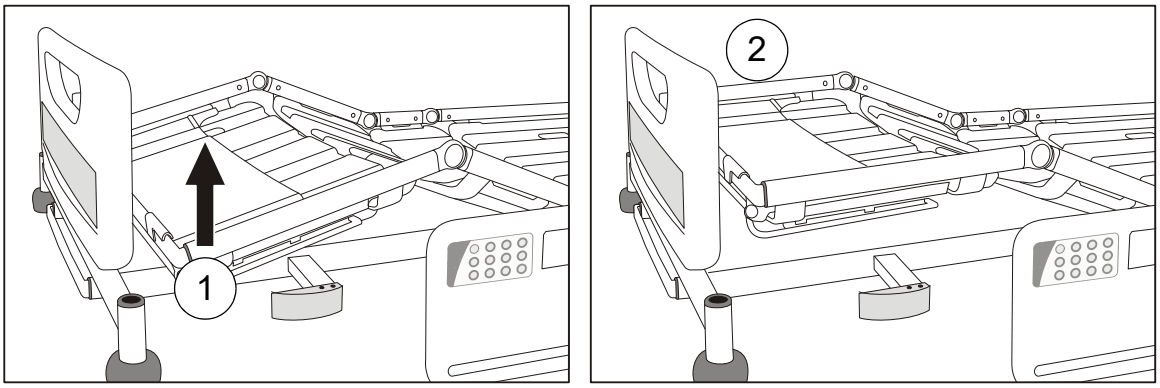

Changing from Fowler position (left) to vascular

To return the calf section to the Fowler position:

Use the caregiver controls or ACP to lower the thigh section to the flat position; then raise the thigh section again.

WARNING

Take care when lifting the calf section. Observe local manual handling guidelines.

Backup battery

Caution

To ensure the battery is kept fully charged and prevent damage to the battery, the bed should be connected to the electricity supply at all times during normal use.

The battery is intended for short term use only. Its life will be reduced if it is used to power the bed for long periods.

The backup battery allows operation of the bed for short periods when it is disconnected from the electricity supply or in emergency situations when the electricity supply is not available.

The battery's charge level is indicated as follows:

If an intermittent warning tone (beep-beep-beep) sounds when operating the bed, the battery is between 75% and 100% charged.

In this condition all bed functions remain operational.

If a continuous warning tone sounds when operating the bed, the battery is between 10% and 75% charged.

In this condition, all bed functions remain operational.

If the ACP battery indicator lights red, the battery is less than 10% charged.

In this condition, all functions are locked.

Recharging the backup battery

To recharge the battery, connect the bed to the electricity supply. Allow at least eight hours to recharge the battery when it is completely discharged.

While the battery is recharging, the ACP battery indicator lights yellow. The indicator will go out when the battery is fully charged.

WARNING

If the battery is left discharged for long periods, its operational life will be reduced.

The battery must only be recharged using the built-in charger. Do not use a separate charger or power supply.

The backup battery must be ventilated while recharging. Do not cover the battery vent hole or obstruct the area around it.

Low power mode

When the bed is disconnected from mains power, it enters a low power mode to conserve battery power. In this state, the underbed lights and the indicators on the control panels are turned off.

Pressing any of the control buttons brings the bed out of low power mode. The bed will return to low power mode two minutes after the last control button was pressed.

Duty cycle lockout

Continuous operation of the controls may exceed the duty cycle of the bed's electrical system, causing the indicators above the buttons to flash. After 30 seconds, the indicators will light and all functions are locked.

If this happens, wait for at least 18 minutes then follow the unlocking procedure described in the section "Function lockout" on page 36.

WARNING

Disconnect the bed from the electricity supply before starting any cleaning or maintenance activity. The bed will still operate on battery power if the function has not been locked on the ACP.

Mattress platform sections

The four mattress platform sections (backrest, seat, thigh and calf) can be removed by pulling them upwards off the mattress platform frame.

Lift off the calf extension sheet (**1**) before removing the calf section (**2**).

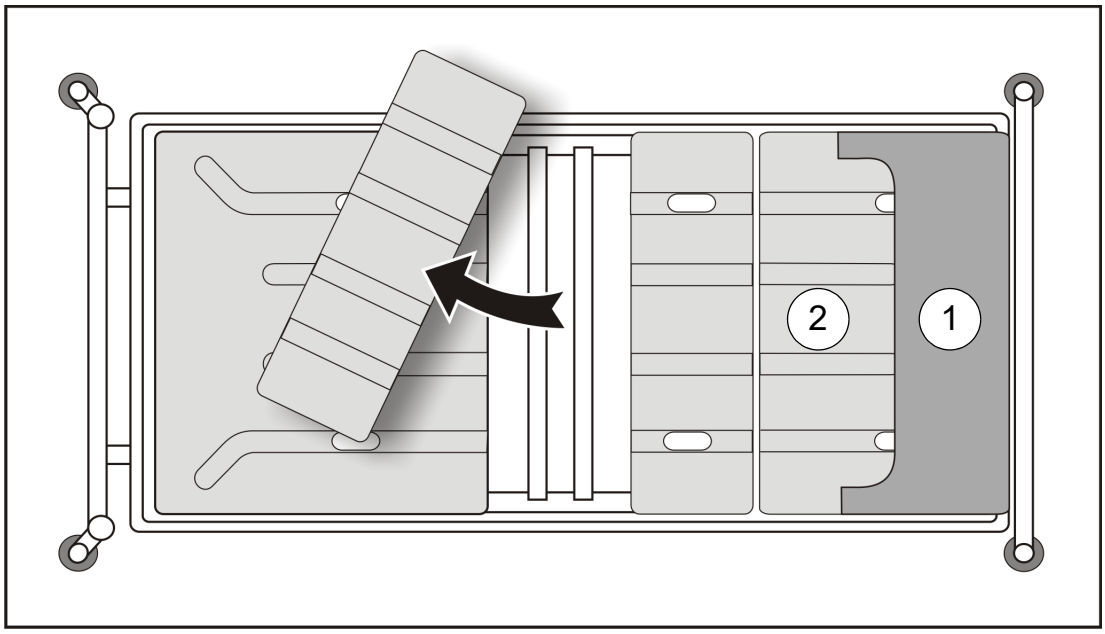

Mattress platform sections (top view)

To replace each section, make sure it is correctly positioned on the mattress platform frame then press down firmly until it snaps into place.

Replace the calf extension sheet (**1**) by clipping it over the end of the mattress platform frame.

Decontamination

WARNING

Do not allow the mains plug or power supply cord to get wet.

NOTE
These instructions also apply to accessories but not to mattresses. For lifting straps and handles, refer to the manufacturer's instructions supplied with the product.

The bed should be cleaned and disinfected weekly, and before a new patient uses the bed.

Cleaning

Remove the mattress and all accessories from the bed.

The head/foot boards and mattress platform sheets should be removed from the bed for cleaning.

Wearing suitable protective clothing, clean all surfaces with a disposable cloth moistened in hand hot water and a neutral detergent.

Start by cleaning the upper sections of the bed and work along all horizontal surfaces. Work methodically towards the lower sections of the bed and clean the wheels last. Take extra care to clean areas that may trap dust or dirt.

Wipe over with a new disposable cloth moistened with clean water, and dry with disposable paper towels.

Allow the cleaned parts to dry before replacing the mattress.

Disinfecting

After cleaning the bed as described above, wipe all surfaces with sodium dichloroisocyanurate (NaDCC) at a concentration of 1,000 parts per million (0.1%) of available chlorine.

In the case of pooling body fluids, e.g. blood, the concentration of NaDCC should be increased to 10,000 parts per million (1%) of available chlorine.

Use of other disinfectants

Arjo recommends sodium dichloroisocyanurate (NaDCC) as a disinfectant because it is effective, stable and has a fairly neutral pH. Many other disinfectants are used in healthcare facilities, and it is not possible for Arjo to test each one to determine whether it may affect the appearance or performance of the bed.

If facility protocols require the use of a disinfectant other than NaDCC (e.g. diluted bleach or hydrogen peroxide), it should be

used with care and in accordance with the manufacturer's instructions.

Caution

Do not use abrasive compounds or pads, or phenol-based disinfectants.

Do not use jet stream cleaning or wash tunnels.

Do not remove grease from the actuator pistons.

Preventive maintenance

This product is subject to wear and tear during use. To ensure that it continues to perform within its original specification, preventive maintenance procedures should be carried out at the intervals shown.

WARNING

This list indicates the minimum recommended level of preventive maintenance. More frequent inspections should be carried out when the product is subjected to heavy use or aggressive environments, or where required by local regulations.

Failure to carry out these checks, or continuing to use the product if a fault is found, may compromise the safety of both the patient and caregiver. Preventive maintenance can help to prevent accidents.

NOTE
Product cannot be maintained and serviced while in use with the patient.

Actions to be done by caregiver	Daily	Weekly
Check operation of side rails	✓	
Visually check castors		✓
Check operation of the manual CPR release handles on both sides of the bed		✓
Visually check power supply cord and mains plug		✓
Carry out a full test of all electrical bed positioning functions (backrest, height, tilt, etc.)		✓
Check that the patient controls, caregiver controls and Attendant Control Panels operate correctly		✓
Check the mattress for damage and fluid ingress		✓
Examine the lifting pole, strap and handle (Optional)	✓	

If the result of any of these tests is unsatisfactory, contact Arjo or an approved service agent.

WARNING

The procedures below must be carried out by suitably trained and qualified personnel. Failure to do so may result in injury or an unsafe product.

Actions to be done by qualified personnel	Yearly
Check that the bedstripper (linen shelf) (Optional) remains in its closed position when maximum foot down tilt is applied	✓
Check that the bed operates correctly using the backup battery as described in the section **Battery test** on page 45.	✓
Check operation of the castors, paying special attention to braking and steering functions	✓
Check that the calf section moves to the Fowler position when the thigh section is raised	✓
Check that the calf section latches securely in the horizontal (vascular) position when manually raised.	✓
Check that the bed extension locks securely in all three positions	✓
Examine the power supply cord and mains plug; if damaged, replace the complete assembly; do not use a rewireable plug	✓
Examine all accessible flexible cables for damage and deterioration	✓
Check all accessible nuts, bolts and other fasteners are present and correctly tightened	✓
Check any accessories fitted to the bed, paying particular attention to fasteners and moving parts	✓

Battery test

Check the condition of the backup battery by carrying out the following test.

1. Disconnect the bed from the electricity supply.

2. Raise the mattress platform to maximum height - ignore the battery warning tone.

3. Raise the backrest and thigh sections as far as they will go.

4. Press and hold the CPR button. The mattress platform will flatten and lower to a mid-height position.

5. Lower the mattress platform to minimum height.

6. Apply maximum head down tilt (Trendelenburg).

7. Return the mattress platform to the level position; then apply maximum foot down tilt (reverse Trendelenburg).

If this test is not completed successfully, connect the bed to the electricity supply for at least eight hours to recharge the battery then perform the test again. If the bed fails a second time, contact Arjo or an approved service agent.

To maintain best performance, the backup battery should be replaced every four years by an approved service agent.

Troubleshooting

If the equipment fails to operate correctly, the table below suggests some simple checks and corrective actions. If these steps fail to resolve the problem, contact Arjo or an approved service agent.

Symptom	Possible Cause	Action
“Beeping” sound when using the bed	Bed is operating from the backup battery	Check the power supply cord is plugged in and the electricity supply is OK Check fuse in mains plug (where fitted)
One or more bed functions inoperative	Function(s) locked on ACP	Unlock function(s) on ACP
Bed is difficult to manoeuvre	Brake pedals in “steer” position	Place brake pedals in the “free” position
All indicators on ACP lit or flashing	Duty cycle of electrical system exceeded	Refer to the section **Duty cycle lockout** on page 39
Mattress platform cannot be lowered	Height control software error	Raise the mattress platform to maximum height to reset software
All functions remain locked after connecting mains power after a near flat battery (ACP battery indicator was red before mains power was connected)	Function(s) locked on all controls due to a low power state	To unlock all functions connect mains power and then press the Function Lock button twice in quick succession then select the function(s) to unlock
Bed movement function buttons do not respond	Control software error	Disconnect and then reconnect the mains power to clear bed software errors

Fault indications

The bed's control software indicates problems in the electrical system by means of flashing indicators on the Attendant Control Panel (ACP). If you experience any of the indications below, contact Arjo or an approved service agent.

Indication		Possible cause
	ACP mattress platform height and head down tilt indicators flashing	Height actuator fault (foot end)
	ACP mattress platform height and foot down tilt indicators flashing	Height actuator fault (head end)
	ACP backrest indicator flashing	Backrest actuator fault
	ACP thigh section indicator flashing	Thigh section actuator fault
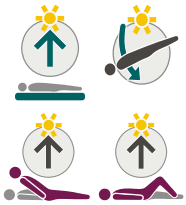	Mattress platform height, head down tilt, backrest and thigh section indicators flashing	Control unit fault

Product lifetime

The lifetime of this equipment is typically ten (10) years. "Lifetime" is defined as the period during which the product will maintain the specified performance and safety, provided it has been maintained and operated in conditions of normal use in accordance with the requirements in these instructions.

6. Accessories and Cables

Recommended accessories for the bed are shown in the table below. Note that some items may not be available in all countries.

Accessory	Product code
Lifting pole with strap and handle	ENT-ACC01
IV pole	ENT-ACC02
IV pole steel hooks	ENT-ACC02 SH
Three-position lifting pole with strap and handle	ENT-ACC03
Angled IV pole	ENT-ACC04
Fracture frame	ENT-ACC05
Syringe pump holder	ENT-ACC07
Oxygen bottle holder (for CD, D, E & PD cylinder)	ENT-ACC08
Small traction assembly	ENT-ACC10
ACP holder	ENT-ACC11
Additional hooks for IV pole	ENT-ACC14
Power supply cord storage hook (supplied with bed)	ENT-ACC15
Oxygen bottle holder (for B5 cylinder)	ENT-ACC18
Urine bottle holder	ENT-ACC19
Heavy duty IV pole	ENT-ACC24
Transducer mounting pole	ENT-ACC26
Head end traction assembly	ENT-ACC32
ITU head end panel (head board)	ENT-ACC34
Oxylog® equipment bracket	ENT-ACC40
Bed pan holder	ENT-ACC56
Oxygen bottle holder	ENT-ACC58
Monitor shelf	ENT-ACC64
Lifting pole mounted IV fluid bag holder	ENT-ACC65
Foot end infill panels	ENT-ACC66
Urine bottle holder	ENT-ACC69
IV pole	ENT-ACC71
Monitor shelf	ENT-ACC74
Integrated IV Pole	ENT-ACC89

Oxylog is a registered trademark of Dräger Medical.

No.	Name	Cable Length (m)	Whether shielding or not	Remark
1	Cable	2.895	No	/

7. Technical Data

General	
Safe working load	250kg
Maximum patient weight	185kg
Product weight (approx.)	150kg
Audible noise	50dB approx.
Operating conditions	
Temperature	10°C to 40°C
Relative humidity	20% to 90% at 30°C, non-condensing
Atmospheric pressure	700hPa to 1060hPa
Electrical data	
Power input	1.6A max. at 230V a.c. 50/60Hz 1.6A max. at 230V a.c. 60Hz (KSA) 2A max. at 120V a.c. 50/60Hz
Duty cycle	10% (2 min. on, 18 min. off)
Safety standards USA/Canada UL CERTIFIED SAFETY US·CA E348583	EN/IEC 60601-1:2005 AMD1:2012 ANSI/AAMI ES60601-1 (2005) AMD 1 (2012) CAN/CSA-C22.2 No. 60601-1:14 IEC60601-2-52:2015
Electric shock protection	Class I Type B
EMC	Complies with IEC 60601-1-2:2014
Potential equalisation terminal	Complies with EN 60601-1:2005 AMD1:2012
Liquid ingress protection	IPX4
Backup battery	2 x 12V series connected, sealed, rechargeable lead/acid gel, 1.3Ah

Dimensions **(subject to normal manufacturing tolerances)**	
Overall length	
Position 1 (Short)	224cm
Position 2 (Standard)	235cm
Position 3 (Extended)	247cm
In-bed length	
Position 1 (Short)	192cm
Position 2 (Standard)	203cm
Position 3 (Extended)	215cm
Overall width	103cm
Height of mattress platform (centre of seat section to floor)	
With 125mm castors	32cm to 76cm Curved Deck Sheets 34cm to 78 cm Flat Deck Sheets
With 150mm castors	34cm to 78cm Curved Deck Sheets 36cm to 80 cm Flat Deck Sheets
Head down tilt angle	12° min.
Foot down tilt angle	12° min.
Mattress size (refer to the section **Mattresses** on page 14)	
Position 2 (Standard)	202cm x 88cm, 12.5 to 18cm thick
Mattress platform angles	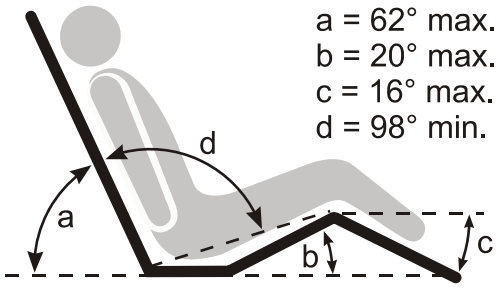

End of life disposal
• Equipment that has electrical and electronic components should be disassembled and recycled per Waste of Electrical and Electronic Equipment (WEEE) or in accordance with local or national regulation. • All batteries in the product must be recycled separately. Batteries are to be disposed in accordance with national or local regulations. • Components that are primarily made up of different kinds of metal (containing more than 90% metal by weight) for example bed frame, should be recycled as metals.

Transport and storage	
Handle with care. Do not drop. Avoid shock or violent impact. This equipment should be stored in a clean, dry and well-ventilated area which meets the following conditions:	
Temperature	-10°C to 50°C
Relative humidity	20% to 90% at 30°C, non-condensing
Atmospheric pressure	700hPa to 1060hPa
Caution **If the bed is stored for a long time, it should be connected to the electricity supply for 24 hours every three months to recharge the backup battery, otherwise it may become unserviceable.**	
Symbols	
= 250 kg/ 550 lb	Safe working load
= 185 kg/ 407 lb	Maximum patient weight
	Alternating current (a.c.)
	Caution
	Refer to instructions for use
	Type B applied part Applied parts are considered to be: Upper frame section, Bed controls, Safety Sides, Head and Foot Boards
	Manufacturer / date of manufacture
CE	CE marking indicating conformity with European Community harmonised legislation
MD	Indicates the product is a Medical Device according to EU Medical Device Regulation 2017/745

Symbols (continued)	
	Mandatory to read instructions for use
SN	Serial number
REF	Model number
	Waste Electrical and Electronic Equipment (WEEE) - do not dispose of this product in general household or commercial waste
	Potential equalisation terminal
	Protective earth (ground)
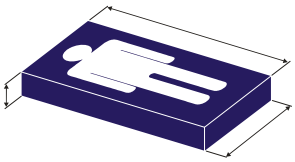	Recommended mattress size
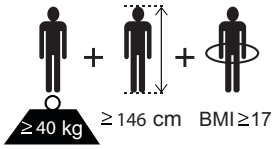	Recommended patient size
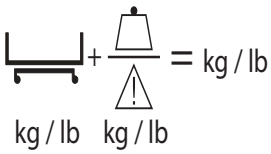	Total weight of the equipment including its safe working load.
	Calf section vascular position
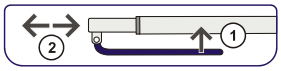	Mattress platform extension
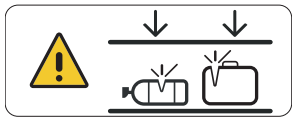	Do not leave Oxygen bottle or any other obstacles under the bed frame while operated.

8. Warranty and Service

Arjo standard terms and conditions apply to all sales; a copy is available on request. These contain full details of warranty terms and do not limit the statutory rights of the consumer.

For service, maintenance and any questions regarding this product, please contact your local Arjo office or approved distributor. A list of Arjo offices can be found at the back of this manual.

Have the model number and serial number of the equipment to hand when contacting Arjo regarding service, spare parts or accessories.

9. Electromagnetic Compatibility

Product has been tested for compliance with current regulatory standards regarding its capacity to block EMI (electromagnetic interference) from external sources.

Some procedures can help reduce electromagnetic interferences:

• Use only Arjo cables and spare parts to avoid increased emissions or decreased immunity which can compromise the correct functioning of the equipment.

• Ensure that other devices in patient-monitoring and/or life-support areas comply to accepted emissions standards.

⚠	**Warning**
Wireless communications equipment such as wireless computer network devices, mobile phones, cordless telephones and their base stations, walkie-talkies, etc. can affect this equipment and should be kept at least 1.5m away from the equipment.	

Intended Environment: Professional Healthcare Facility Environment.

Exceptions: HF Surgical Equipment and the RF Shielded room of an ME SYSTEM for magnetic resonance imaging.

⚠	**Warning**
Use of this equipment adjacent to or stacked with other equipment should be avoided because it could result in improper operation. If such use is necessary, this equipment and the other equipment should be observed to verify that they are operating normally.	

Guidance and manufacturer's declaration – electromagnetic emission		
Emission test	**Compliance**	**Guidance**
RF emissions CISPR 11	Group 1	This equipment uses RF energy only for its internal functions. Therefore its RF emissions are very low and are not likely to cause any interference in nearby electronic equipment. This equipment is suitable for use in all establishments other than domestic and those directly connected to the public low-voltage power supply network that supplies buildings used for domestic purposes.
RF emissions CISPR 11	Class A	
Harmonic emissions IEC 61000-3-2	Class A	
Voltage fluctuations/ flicker emissions IEC 61000-3-3	Complies	

Guidance and manufacturer's declaration – electromagnetic immunity			
Immunity test	**IEC 60601-1-2 test level**	**Compliance level**	**Electromagnetic environment-guidance**
Electrostatic discharge (ESD) EN 61000-4-2	±2kV, ±4kV, ±8kV, ±15kV air ±8kV contact	±2kV, ±4kV, ±8kV, ±15kV air ±8kV contact	Floors should be wood, concrete or ceramic tile. If floors are covered with synthetic material the relative humidity level should be at least 30%.

Conducted disturbances inducted by RF fields EN 61000-4-6	3V in 0,15 MHz to 80 MHz 6V in ISM and amateur radio bands between 0,15 MHz and 80 MHz 80% AM at 1 kHz	3V in 0,15 MHz to 80 MHz 6V in ISM and amateur radio bands between 0,15 MHz and 80 MHz 80% AM at 1 kHz	Portable and mobile RF communications equipment should be used no closer to any part of the product, including cables, than 1.0m, if the transmitter's output power rating exceeds 1W[a]. Field strengths from fixed RF transmitters, as determined by an electromagnetic site survey, should be less than the compliance level in each frequency range[b]. Interference may occur in the vicinity of equipment marked with this symbol:
Radiated RF electromagnetic field EN 61000-4-3	Professional Healthcare environment 3 V/m 80 MHz to 2,7 GHz 80% AM at 1 kHz	Professional Healthcare environment 3 V/m 80 MHz to 2,7 GHz 80% AM at 1 kHz	
Proximity fields from RF wireless communications equipment EN 61000-4-3	385 MHz - 27 V/m 450 MHz - 28 V/m 710, 745, 780 MHz - 9V/m 810, 870, 930 MHz - 28 V/m 1720, 1845, 1970, 2450 MHz – 28 V/m 5240,5500, 5785 MHz - 9V/m	385 MHz - 27 V/m 450 MHz - 28 V/m 710, 745, 780 MHz - 9V/m 810, 870, 930 MHz - 28 V/m 1720, 1845, 1970, 2450 MHz – 28 V/m 5240,5500, 5785 MHz - 9V/m	
Electrical fast transient/burst EN 61000-4-4	±1kV SIP/SOP ports ±2kV AC port 100kHz repetition frequency	±1kV SIP/SOP ports ±2kV AC port 100kHz repetition frequency	Mains power supply should be that of a typical commercial or hospital environment.
Power frequency Magnetic field EN 61000-4-8	30A/m 50 Hz or 60 Hz	30A/m 50 Hz	Power frequency magnetic fields should be at levels characteristic of a typical location in a typical commercial or hospital environment.
Surge IEC 61000-4-5	±0,5kV ±1kV; ±2 kV, AC Mains, Line to Ground ±0,5kV ±1kV, AC Mains, Line to Line	±0,5kV ±1kV; ±2 kV, AC Mains, Line to Ground ±0,5kV ±1kV, AC Mains, Line to Line	

Voltage dips, short interruptions and voltage variations on power supply input lines IEC 61000-4-11	0% UT; 0,5 cycle At 0°, 45°, 90°, 135°, 180°, 225°, 270° and 315° 0% UT; 1 cycle and 70% UT; 25/30 cycles Single phase: at 0° 0% UT; 250/300 cycle	0% UT; 0,5 cycle At 0°, 45°, 90°, 135°, 180°, 225°, 270° and 315° 0% UT; 1 cycle and 70% UT; 25/30 cycles Single phase: at 0° 0% UT; 250/300 cycle	
NOTE: U_T is the AC mains voltage prior to application of the test level.			
[a] Field strengths from fixed transmitters, such as base stations for radio (cellular/cordless) telephones and land mobile radios, amateur radio, AM and FM radio broadcast and TV broadcast cannot be predicted theoretically with accuracy. To assess the electromagnetic environment due to fixed RF transmitters, an electromagnetic site survey should be considered. If the measured field strength in the location in which the product is used exceeds the applicable RF compliance level above, the product should be observed to verify normal operation. If abnormal performance is observed, additional measures may be necessary. [b] Over the frequency range 150 kHz to 80 MHz, field strengths should be less than 1 V/m.			

Intentionally left blank

目录

警告、注意事项和说明

⚠	**警告**	指出操作过程或某些条件下可能出现的危险，如不正确遵守操作规程可能会造成死亡、人身伤害或其他严重不良反应。
⚠	**注意事项**	指出操作过程或某些条件下可能出现的危险，如不正确遵守操作规程可能会造成设备损坏或故障。
	注意	解释或强调某种操作过程或条件。

常规警告

警告

妥善保管该说明书；便于日后所需时参考所用。

在操作之前应阅读和理解本手册。必须就本产品的功能、控件以及任何附件的正确使用等对护理人员进行培训。

为了确保安全有效地使用本产品，以及确保患者和护理人员的安全，必须遵循本说明书中的说明。

未经授权改动或维修本产品可能影响其安全性能，并会使所有保修失效。对于此类维修或变动可能造成的任何事故、异常或性能降低， Arjo 不承担任何责任。

为避免电击风险，本产品只能连接到具有保护性接地的电源。

切勿在本设备附近吸烟或使用明火，也不要将其暴露于极端温度下。

切勿在存有麻醉剂等可燃性气体的环境 （如手术室）中使用电动病床。

本病床设计为仅供室内使用，不应在正常医院环境之外的地方使用。

切勿使用非为用于本病床设计的附件或没有经过许可的附件。

在本病床上使用来自其他供应商或制造商的设备之前，用户应进行风险评估。

当病床处于静止状态时，切记总是使用制动装置。

为了减小跌落受伤风险，当患者无人看护时，应将病床降低到最低高度。

当患者无人看护时，不应使其处于头低脚高位姿势。

为了降低失去平衡的风险，不要让患者在床垫平台倾斜时 （头或脚朝下）上下床。

警告

若风险评估结果表明患者由于自身的健康状况或者其它情况有滞留的风险，同时让其处于起伏状姿势并无任何医疗效果，当此患者无人看护时，将床垫平台置于平坦位置并停用所有控制功能 （功能锁定）。

建议使用护理控制面板上的功能锁定装置，用以防止因物体压在患者控制面板上而导致的意外移动。

在操控病床时，请确保脚、氧气瓶、床侧家具或其他物品等障碍物不会使病床的移动受限。

操作时，请勿将氧气瓶或其他障碍物留在床架下，以免造成潜在的损坏或伤害。

在移动或操作病床时，应注意连接到它的任何附件 （如吊杆）不会碰到门、天花板等。

在推拉病床时，请手握床头板或者床尾板；不可手握侧护栏或者任何附加的配件。

在操作病床之前，确保患者姿势正确以避免卡夹或不平衡。

不要将手持控制器 / 护理控制面板 (ACP) 以及其他设备的拖曳电缆挤压或卡夹到病床的移动部件之间。

注意不要让衣物或床单缠绕到病床的移动部件上。

本产品符合电磁兼容性 (EMC) 适用标准的要求。但是，医疗电气设备需要在电磁兼容性方面采取特殊预防措施，而且应遵守产品维修手册中的电磁兼容性信息安装和使用。

医疗电气设备可能会受到便携式和移动射频通信设备 （如移动电话）的影响。

如果发生与该医疗器械相关并影响用户或患者的严重事件，则用户或患者应将该严重事件报告给医疗器械制造商或分销商。在欧盟，用户还应向其所在成员国的主管当局报告该严重事件。

1. 前言

这些说明包含 Arjo Enterprise® 8000X 系列急症护理医用病床的安装、使用和保养信息。这些病床具有多种功能，能够为患者和护理人员提供最佳护理体位。

标准功能：

- 分离式折叠侧护栏带控制面板
- 电动调整病床高度和腿板高度
- 电动操作的背板回缩功能
- Bio-Contour® 高级仿生体位系统
- Auto-Chair （一键式心脏椅位）功能
- 电动调整头朝下倾斜 （头低脚高位）和脚朝下倾斜（头高脚低位）
- 手动调整小腿水平抬升体位
- 带有可拆卸面板的床垫支撑表面
- 可调整长度的床垫平台
- 引流袋导轨
- 床底灯
- 采用 125mm 单脚轮
- 弧形床垫平台

可选功能：

- 150mm （单轮或双轮）脚轮
- 床单更换延伸架 （床单架）
- 第 5 脚轮
- DIN 附件导轨
- 带锁床尾板和床头板
- 横条制动踏板 / 杆
- 带有透 X 射线片盒的靠背
- IndiGo™ 直观驱动辅助
- 安装在脚端的护理控制面板 (ACP)
- 平面床垫平台

可选功能由客户在订购时指定。所选功能通过设备型号来指示。

可在规格标签上找到病床的型号 REF 和序列号 SN；规格标签位于床头板下方的床架上。

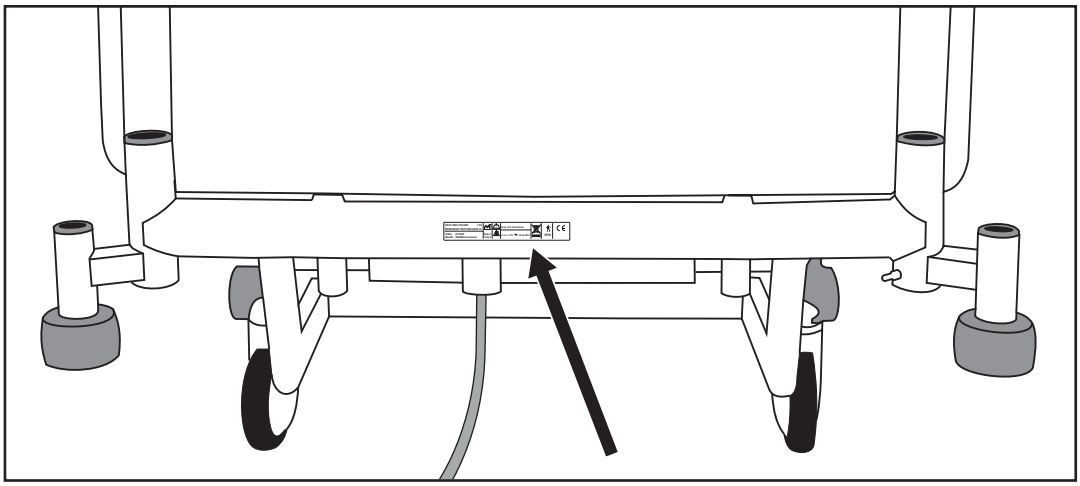

规格标签

注意事项

在使用病床之前，确保规格标签上的“输入电源”功率与当地供电功率一致。

产品概览

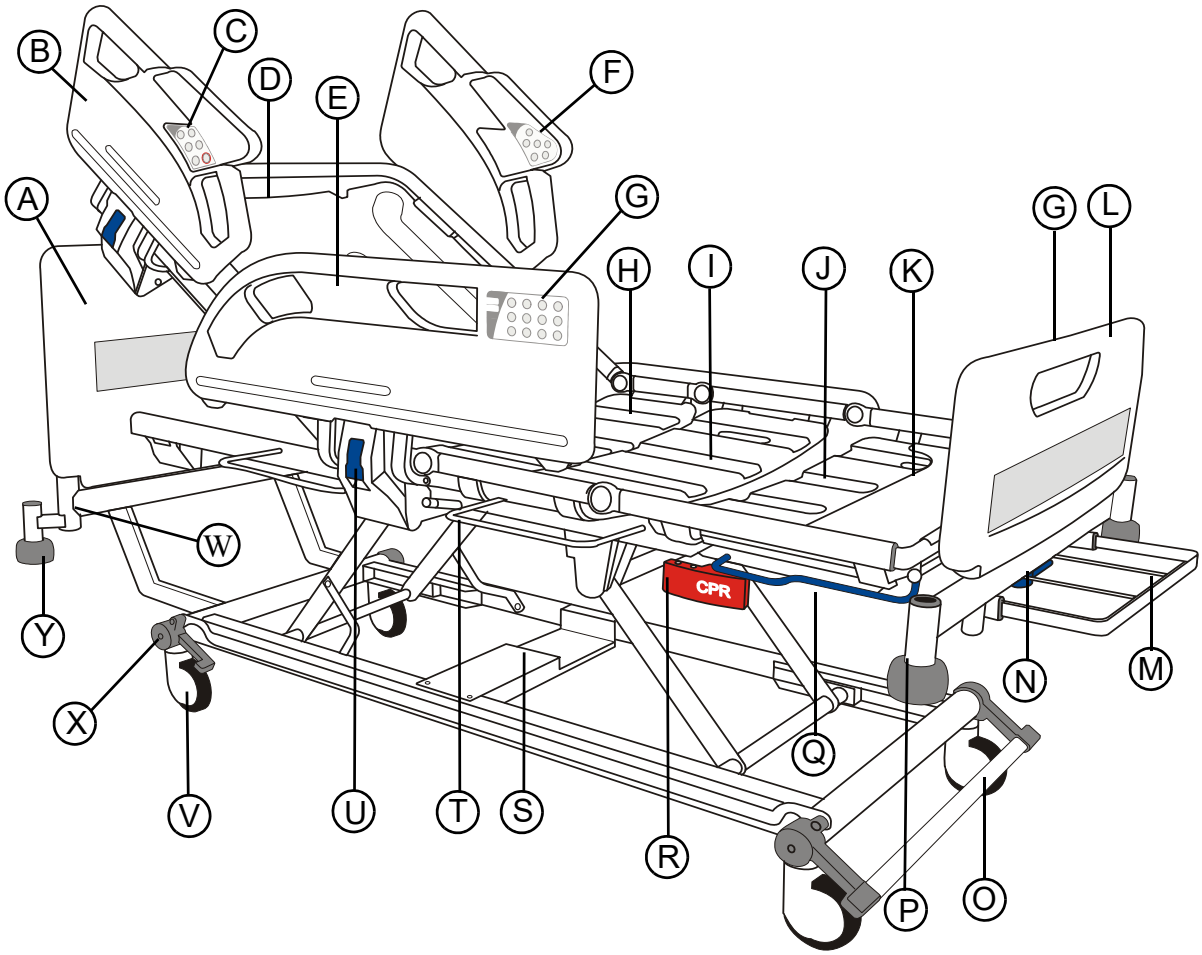

A. 床头板
B. 头端侧护栏
C. 护理人员控制面板
D. 靠背垫
E. 足端侧护栏
F. 患者控制面板
G. 护理控制面板 (ACP)
H. 座椅垫
I. 大腿板
J. 小腿垫
K. 小腿延长垫
L. 床脚板
M. 床单更换延伸架 （床单架）（可选）
N. 病床延伸锁定手柄
O. 制动踏板 / 杆 （选件）
P. 附件插孔
Q. 延长推动杆
R. 心肺复苏术 (CPR) 体位解锁手柄
S. 第 5 脚轮位置 （选件，参见第 74 页）
T. 引流袋导轨
U. 侧护栏解锁手柄
V. 脚轮
W. 升降杆插孔
X. 头端制动踏板 （可选）
Y. 滚轮缓冲

注意
当存在带有 X 射线暗盒托盘的靠背时候，平板垫会作为标准配件提供。

警告

为了确保患者能够安全使用病床，应由具备临床医疗资质的人员评估患者年龄和病情。

在某些医疗情况下，可能不适合使用头低脚高位和头高脚低位。只有在评估患者状况并在临床合格人员的指导下，才能使用这些倾斜体位。

产品用途

此产品旨在对医院和护理机构患者提供支持，并可以定位心肺复苏术 (CPR) 以及头低脚高位。

床适合在以下情况下使用：

- 在医院中提供危重症监护，要求 24 小时医疗观察和持续监护的场所，如 ITU、 ICU 和 CCU （* 应用环境 1）。
- 在医院或其他医疗机构中提供急救监护，要求医疗观察和监护的场所，如普通内科和外科病房 （* 应用环境 2）。
- 在医疗领域的长期护理，要求医疗观察且在必要时提供监护的场所，如护理中心和老年病医疗机构 （* 应用环境 3）。

* 应用环境在 IEC 60601-2-52 中定义。

适应症

本病床适用于有活动和移位困难的高依赖患者，和 / 或临床疾病要求他们的体位作最少身体移动和处置的患者。

根据护理人员的判断，具有适当自理能力的患者可以使用控件调整自己的体位。

床垫平台可以根据临床设置中定义的应用环境的要求定位，以协助对患者的治疗。

禁忌症

本病床不适合在以下情况下使用：

- 室内，例如：家庭保健 （* 应用环境 4）。
- 门诊护理 （* 应用环境 5）。

* 应用环境在 IEC 60601-2-52 中定义。

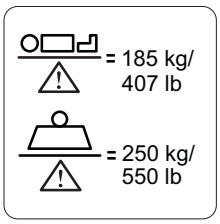

此病床不适用于体重低于 40kg 的患者。

患者体重最好不超过 185kg。

病床的安全承重是 250kg。

安全承重的计算方式如下 （根据 IEC 60601-2-52 标准）：

患者最大重量 185kg

床垫 20kg

附件 （包括附加负荷）..... 45kg

总计 250kg

警告

如果床垫和附件的总重量超出 65kg，必须相应减少最大患者体重。

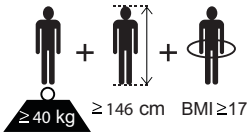

建议患者体型：体重等于或大于 40kg，身高介于 146cm 和 190cm 之间， BMI 等于或大于 17。

由护理人员酌情决定，如果患者的身高超过 190 厘米可能需要延长病床以适应容纳患者的身高 — 请参阅第 80 页的 “ 病床长度调整 ”。确保患者的身高不超过第 106 页所示的 “ 患者在病床上的长度 ”。

3. 安装

以下章节对床的安装方法进行了说明。

警告

若电源线或电源插件损坏，必须由授权的维修人员更换整个组件。请勿移除安装的插件，或使用可重新接线的插头或转接器。

确保电源线没有出现拉伸、扭结或挤压状况。

切勿让电源线拖在地面上，这可能会造成绊倒危险。

确保电源线不会与病床移动部件缠结到一起。

在移动病床之前，将电源线与电源断开，并如图所示存放。

注意事项

在首次使用前，或者病床已经超过三个月时间没有使用，请将病床连接到电源至少 24 小时，以使备用电池能够完全充电。否则会缩短电池使用寿命。充电完毕后，请执行如图所示第 101 页的电池测试，以确保电池的电量已经充满。

电力供应

将电源插头连接到一个合适的插座。确保可以在紧急情况下迅速断开电源插头。

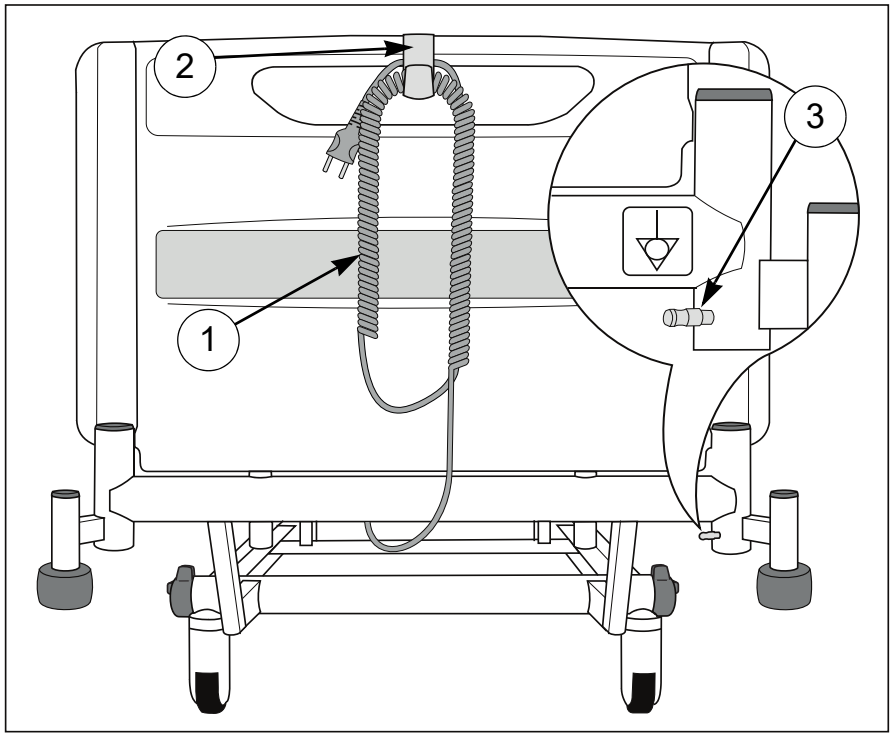

电源线和电位均衡端子

病床连接到电源后，控制面板上的指示灯会亮起。（参考第 90 页）。

电源线 (**1**) 配有一个塑料挂钩 (**2**)。当不使用病床时或者移动病床前，将挂钩夹在床头板上，卷起电线并如图所示将电线挂在挂钩上。

要将病床与电源断开，请将电源插头从插座拔出。

电位均衡端子 (**3**) 位于病床的头端。

当其他电气设备处于患者或护理人员的接触范围时，通过将它们的电位均衡终端连接在一起，可以最大限度减少设备之间的电位差。

床底灯

病床任意一侧的床底灯可以照亮地面。

床底灯一直开启，除非床处于电力不足状态。参考章节第 95 页的 “ 低功率模式 ”。

床垫

警告

请务必使用正确尺寸和种类的床垫。不匹配的床垫可能引发危险。

即使尺寸正确，使用很软的床垫也可能出现卡夹危险。

与侧护栏配合使用的最大建议床垫厚度是 18cm。

请阅读床垫随附的使用说明书。

如果为床垫指定的最大可承受患者体重不同于为病床指定的值，应以较低值为准。

小腿延长板上的标签列出正确的床垫尺寸：

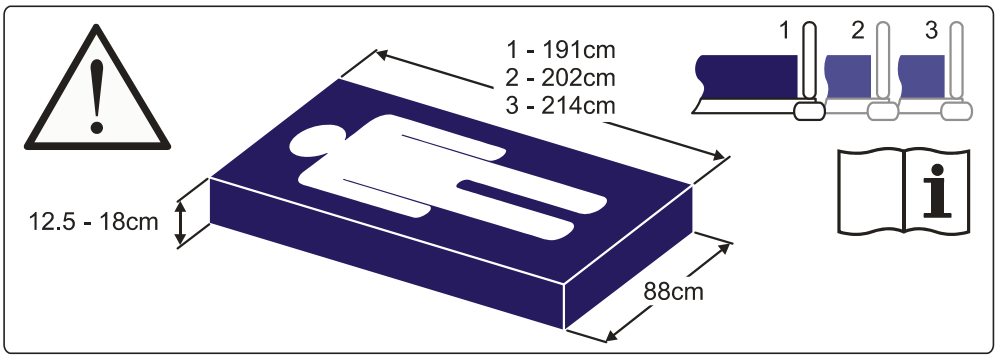

床垫尺寸标签

注意
标签上的数字 1、 2 和 3 表示不同的床垫平台长度；请参考第 80 页上的**病床长度调整**。

床垫和侧护栏

在选择病床和床垫组合时，应根据每个患者的临床评估以及当地政策来考虑侧护栏的使用，这一点很重要。

在评估床垫是否适合与侧护栏配合使用时，应考虑以下因素：

- 病床设计为使用厚度最高 18cm 的泡沫床垫时具有的可接受侧护栏高度。
- 专业电动充气 / 泡沫更换床垫在患者躺下时通常会包裹住患者，而且会比泡沫床垫更深，但不影响安全性。所有安究医疗设备公司的专业更换床垫在患者和侧护栏之间保持足够间隙，以保持侧护栏的功能。其它品牌的专用床垫替代垫必须在使用前逐一进行评估，以验证替代垫可以保持足够的间隙。
- 不建议在本病床上使用床垫覆盖垫。
- 为确保遵守 IEC 60601-2-52 标准，应使用经许可的 Arjo 床垫。根据这一标准，使用其它床垫必须经用户验证。
- 欲获得更多关于合适的床垫和替代床垫的详细信息，请与您当地的 Arjo 办事处或经认证的分销商联系。本手册背面列载了 Arjo 各办事处的列表。

以下章节对床的操作方法进行了说明。

警告

在穿着适脚鞋的情况下用脚操作制动踏板。请勿用手操作踏板。

制动和转向

制动踏板有如下所示的三个位置：

- **制动**：所有四个脚轮均施加制动。
- **自由**：所有四个脚轮均可自由滚动和转向。
- **转向**：所有四个脚轮均可滚动，但转向脚轮 （见下面）被锁定，所以它不能旋转。这可使床沿着直线移动。

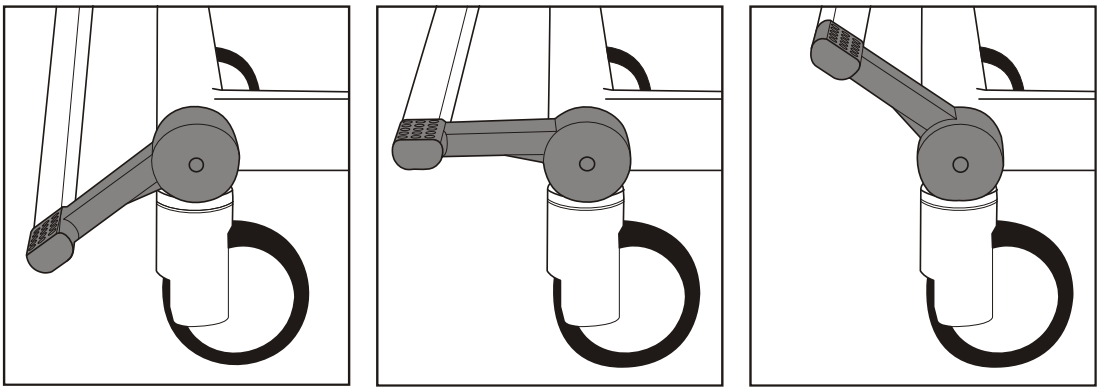

制动 **自由** **转向**

制动踏板 病床脚端的制动踏板可以联接全宽度杆。

使用转向脚轮 将病床放于适当位置，使所有的脚轮都朝着病床行进的方向。抬起踏板锁住转向脚轮，并从另一端推移病床。

注意
转向脚轮可以位于病床的任意一端，由客户订购时指定。

注意
在实际产品上，制动踏板的外观可能会略有改变，但功能和用户说明保持不变。

头端制动踏板

制动踏板 (**1**) 安装在病床的头端。这些踏板的操作同脚端的踏板一样。

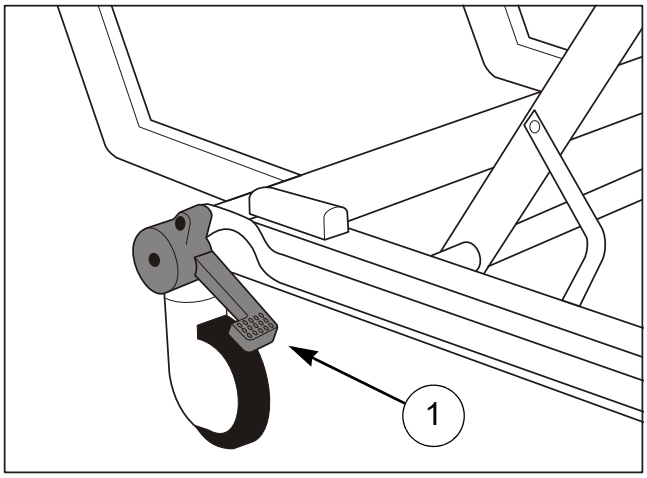

头端制动踏板

如何使用第 5 脚轮 （可选）

第 5 脚轮提供了更好的灵活性和转向。

启用第 5 脚轮：

1. 踏下第 5 脚轮启用踏板 (A) 的头端。**（请参阅图 1）**
   第 5 脚轮 (B) 将往下降至接触地面。
2. 检查制动器是否已解锁且制动踏板是否处于 “ 自由 ” 位置。
   （请参阅图 2）
3. 病床可以投入使用了。

停用第 5 脚轮：

1. 踏下第 5 脚轮启用踏板 (A) 的脚端。**（请参阅图** 1）
2. 确保第 5 脚轮 (B) 从地面上抬起来。

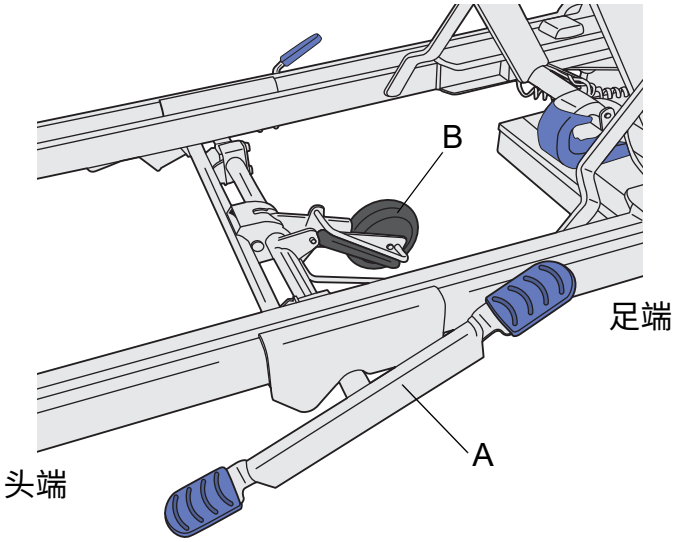

图 1 - 第 5 个脚轮激活踏板

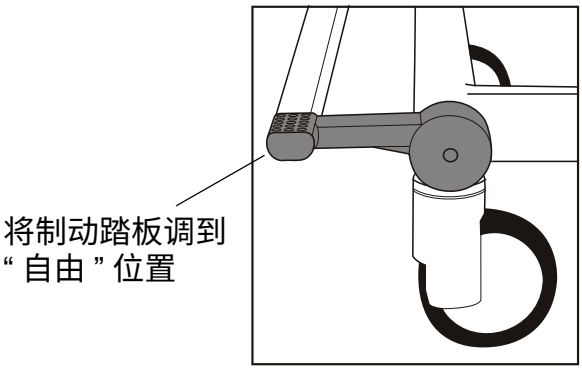

图 2 - 自由位置

侧护栏

警告

在使用此病床前，具备临床资格的人员有责任考虑患者的年龄、体型和病情决定是否可以使用此病床。

侧护栏不是用来限制试图离开病床的患者。

确保床垫适合与侧护栏配合使用，请参阅第 71 页上的床垫和侧护栏。

为预防床出现卡夹，请确保调整床垫平台时患者的头部和四肢远离侧护栏。

这个符号标出了侧护栏接触点。保持手和手指远离这些区域。

降低侧护栏：

握住任意一个侧护栏手柄 (**1**)。向外拉蓝色解锁手柄 (**2**) 并调低侧护栏 (**3**)，可将它折叠到床垫平台下。将侧护栏放低至床垫平台下方。

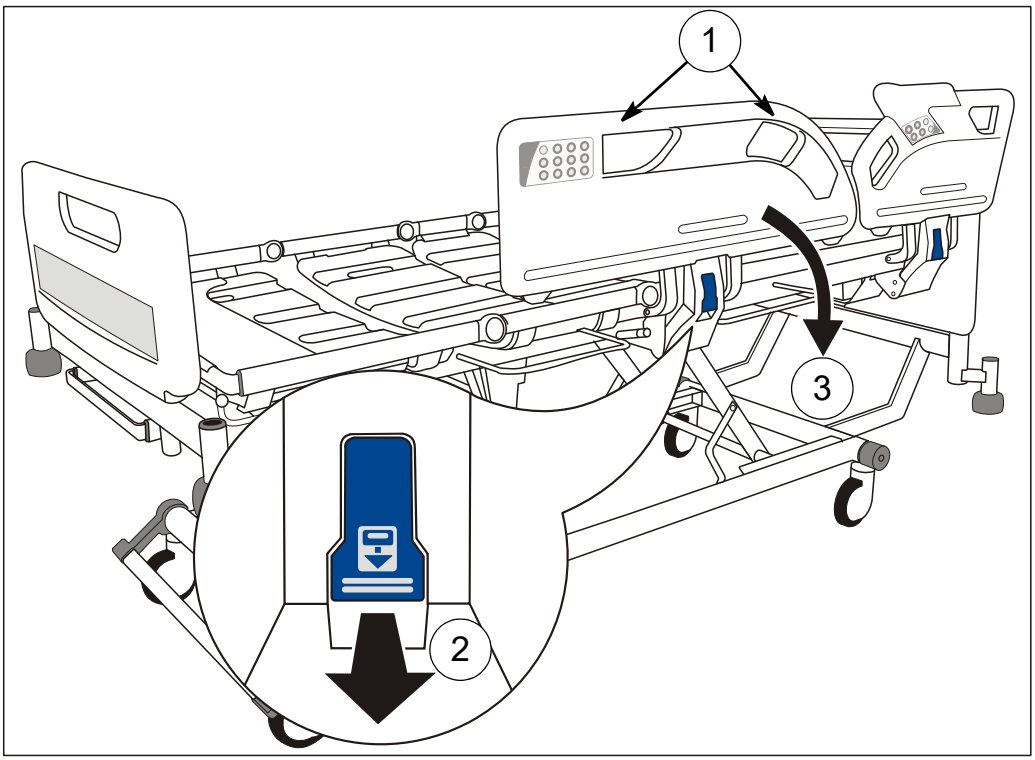

侧护栏操作

注意
头端和脚端侧护栏的操作方式相同。

升高侧护栏：

握住任意一个侧护栏手柄 (**1**)。拉起侧护栏并向远离病床方向，直到其锁定在升高的位置。

警告

在侧护栏升高时，确保其牢固地被锁定到当前位置。

心肺复苏术 (CPR) 靠背解锁

手动心肺复苏术 (CPR) 解锁手柄位于病床任意一侧小腿垫的下方。

如果患者发生心脏骤停，请拉动心肺复苏术 (CPR) 体位解锁手柄 (**1**)。这将降低靠背 (**2**) 以便能够施行心肺复苏术。

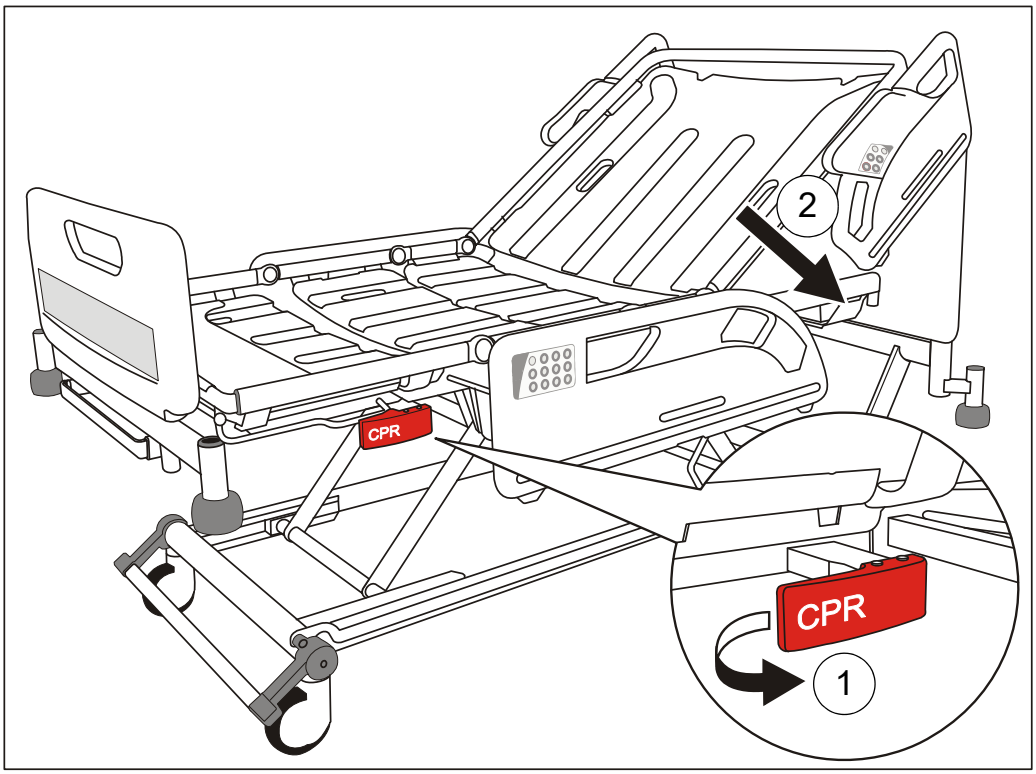

心肺复苏术 (CPR) 靠背解锁

警告

靠背会快速落下；应将手远离以避免夹伤。

注意事项

只应在紧急情况下使用手动心肺复苏术 (CPR) 解锁；每天重复使用会导致永久磨损。

X 射线片盒 （可选）

该 X 射线片盒允许在任何角度靠着靠背进行胸部 X 射线拍片，并且患者不需要离开病床。

警告

将床垫平台定位在人体工程学的高度以便装载或移除 X 射线片盒。

在调高或调低靠背之前，请将 X 射线片盒放回它在靠背下面的闭合位置。

请勿坐在或放过重的物体于 X 射线片盒上。

确保 X 射线片盒始终安全地固定于其所在位置。

操作

施加脚轮制动。从病床上拆下床头板。

拉动旋钮 (1) 解锁卡锁并将托盘拉出 (2) 直到不能再拉。

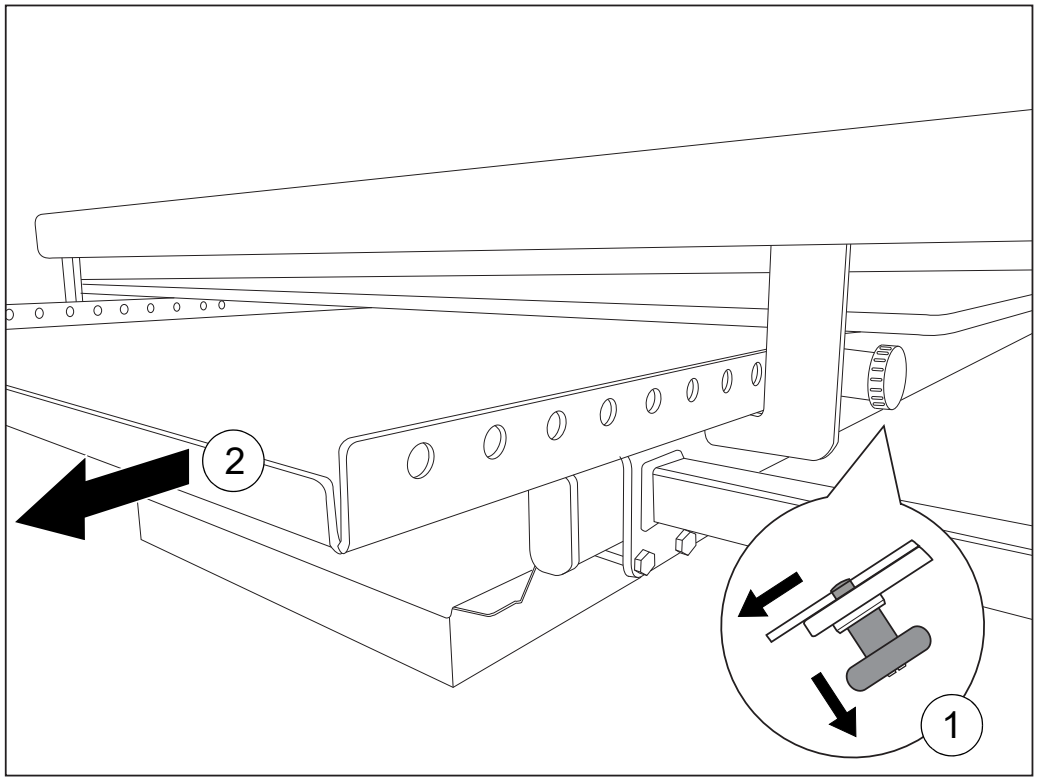

X 射线片盒操作

在完全打开的位置 (3) 解锁该按钮来托住托盘。将 X 射线片盒 (4) 放在托盘上，让它的底部紧靠着托盘足底部的边缘。

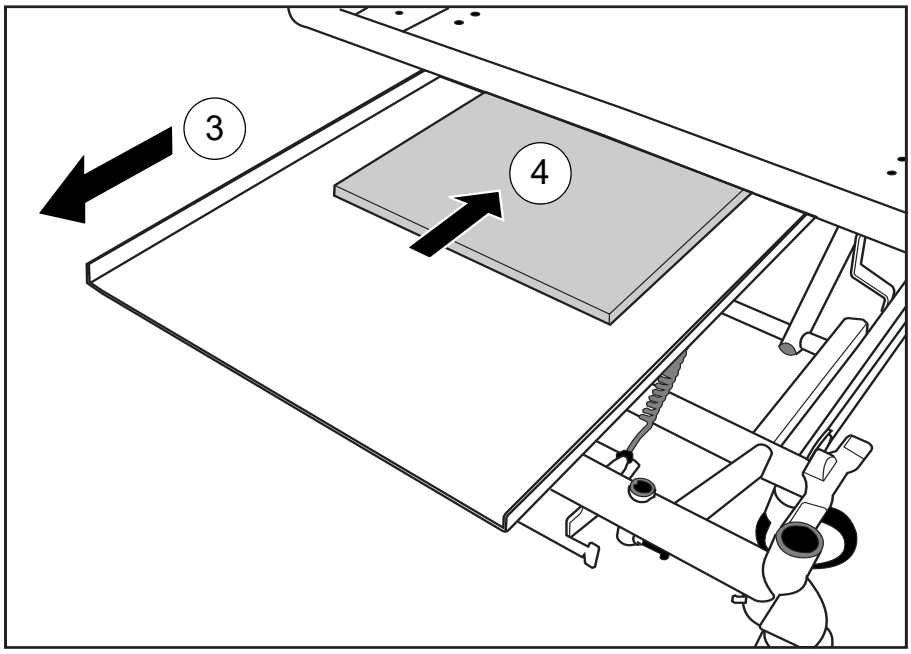

放置 X 射线片盒

拉动旋钮并在靠背下方滑动托盘。

X 射线坐姿工具顶部的红色模制件表示 X 射线片盒的右上角。该功能可帮助精确定位。

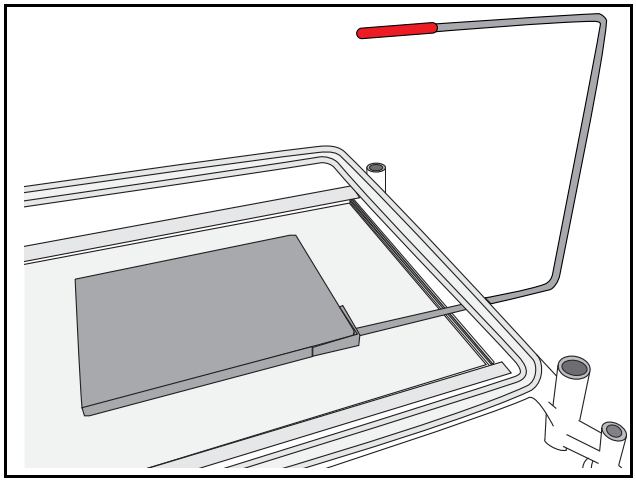

X 射线坐姿工具

解锁旋钮以将托盘固定在其中一个锁定位置。

使用完后，将托盘拉出到完全打开的位置并卸下 X 射线片盒。将托盘放回在靠背下面的闭合位置并将床头板恢复原位。

病床长度调整

病床的长度可调节至三个位置。病床长度调节使用如下所示：

1 缩短长度，用于在有限空间中对病床进行转向

2 标准长度，用于常规用途。

3 加长长度，以容纳身材高大的患者

警告

在加长病床时，在病床头端安装一个合适的泡沫床垫延展 (squab)。

应始终将床架和床垫平台调整到相同长度，并确保二者的闩锁牢固地卡合到位。

在调整病床长度之前放平床垫平台。

在升起推动杆时，应注意不要夹住手指。

延长床架：

向外拉出蓝色的延长锁定手柄 (**1**)。将床架 (**2**) 拉出至所需位置并解锁手柄。

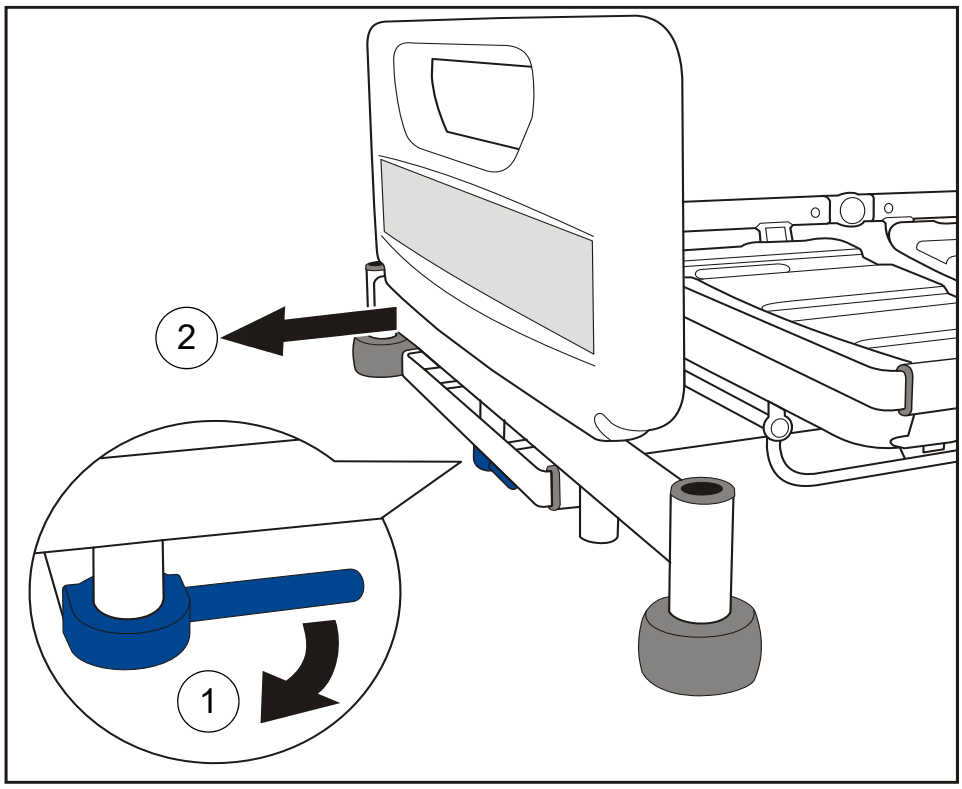

延长床架

延长床垫平台：

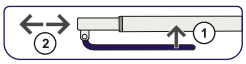

提起蓝色的延长推动杆 (**1**)。握住脚端的横杆中部 (**2**) 并拉出床垫平台到所需位置。解锁推动杆。

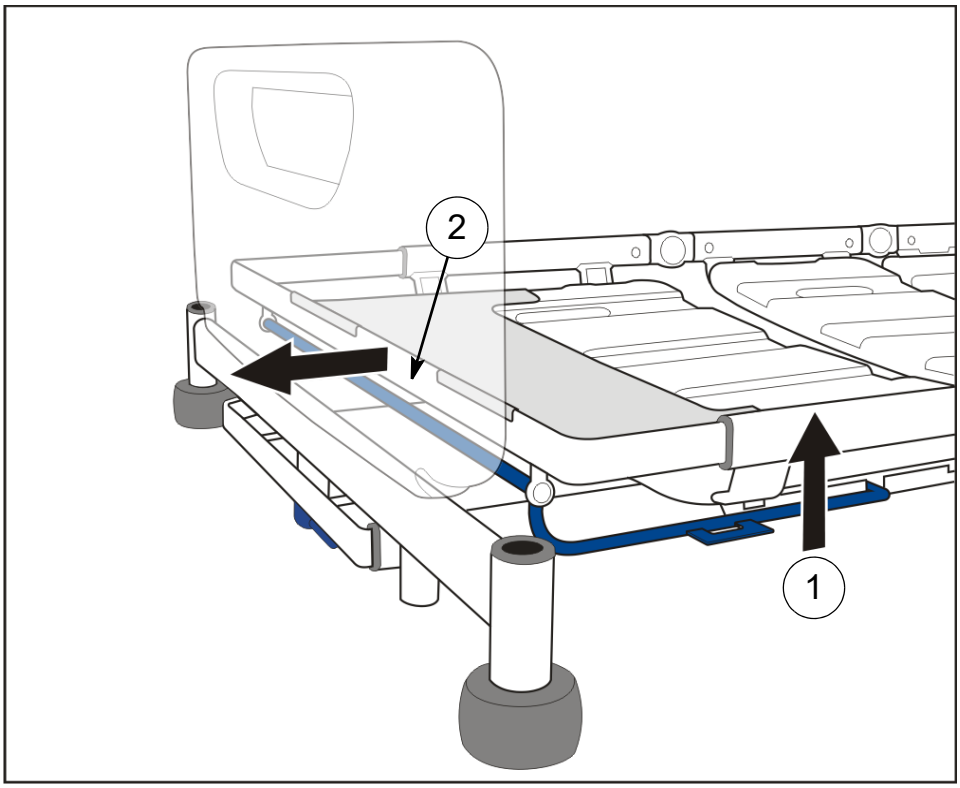

延长床垫平台

警告

延长床垫平台后，请确保将小腿延长板夹到床垫平台架的末端。

缩短病床：

按照相反顺序执行上述步骤。

床单更换延伸架 （床单架）（可选）

床单更换延伸架用于更换床单时放置清洁床单。

从尾板下方的闭合位置拉出床单更换延伸架。

使用后，将床单更换延伸架推回到闭合位置。

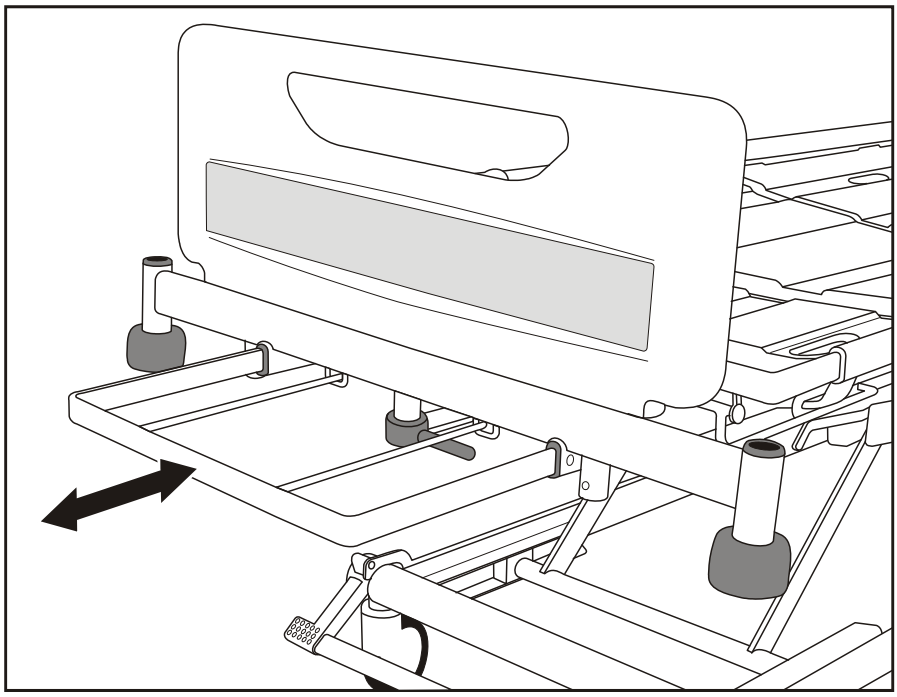

床单更换延伸架 （床单架）

注意事项

床单更换延伸架的安全工作负荷是 20kg。

在使用床单更换延伸架之前应放平床垫平台。

吊杆和附件插孔

起坐吊杆插孔 (**1**) 位于床垫平台的头端。

用于支撑兼容附件的插孔位于病床的头端 (**2**) 和脚端 (**3**)。

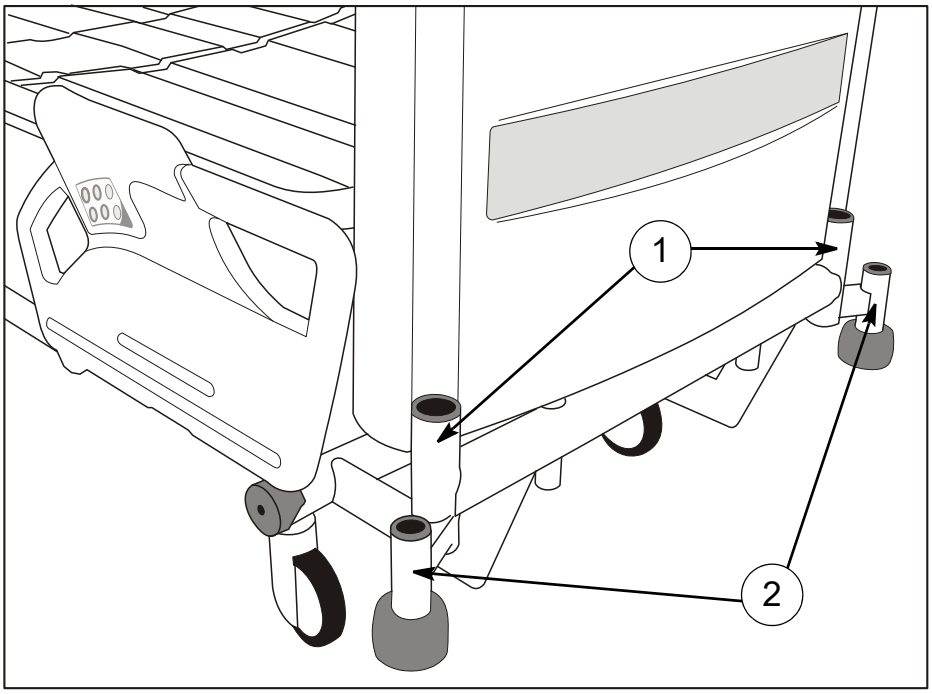

吊杆和附件插孔 （头端）

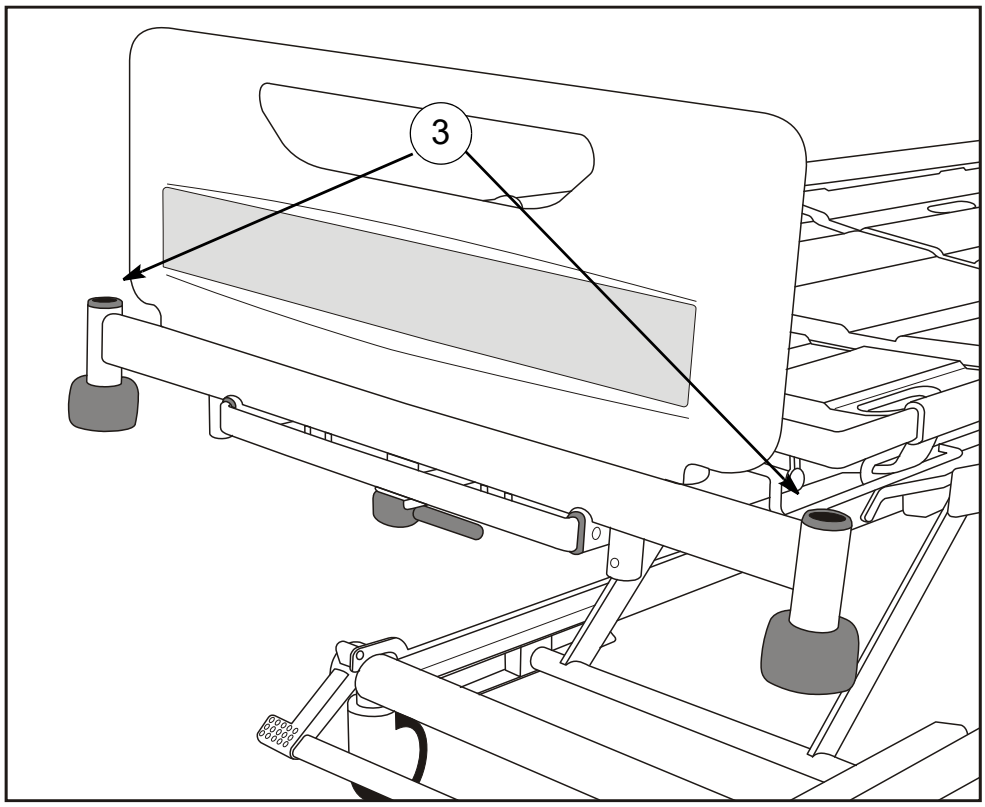

附件插孔 （脚端）

引流袋导轨

用来支撑引流袋的导轨 (**1**) 位于病床任意一侧大腿板和背板的下方。

（选件）病床还可以配备 DIN 附件导轨 (**2**)。

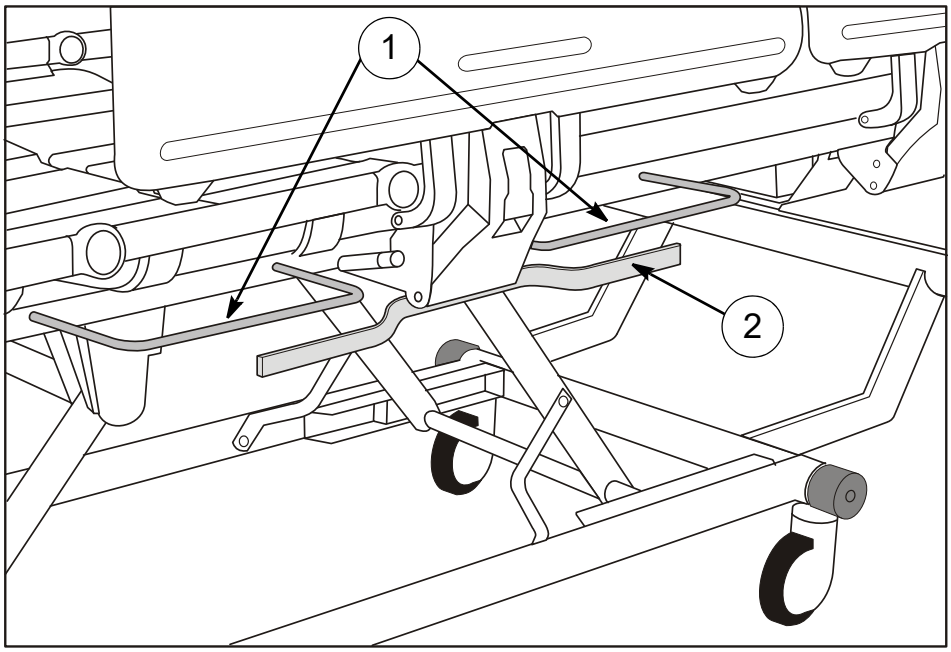

引流袋导轨和 DIN 导轨

注意事项

每个引流袋导轨和 DIN 导轨可以安全承受的最大重量是 5kg。

头板和尾板

可以将头板和尾板轻松地从病床提下，以便接触患者。

（选件） 头板和尾板均可配备锁定搭扣 (**1**) 以防意外移动。**解锁其中一个板：**撤除锁销 (**2**) 并将其直角回转 (**3**)；板此时可以抬起与床分离。

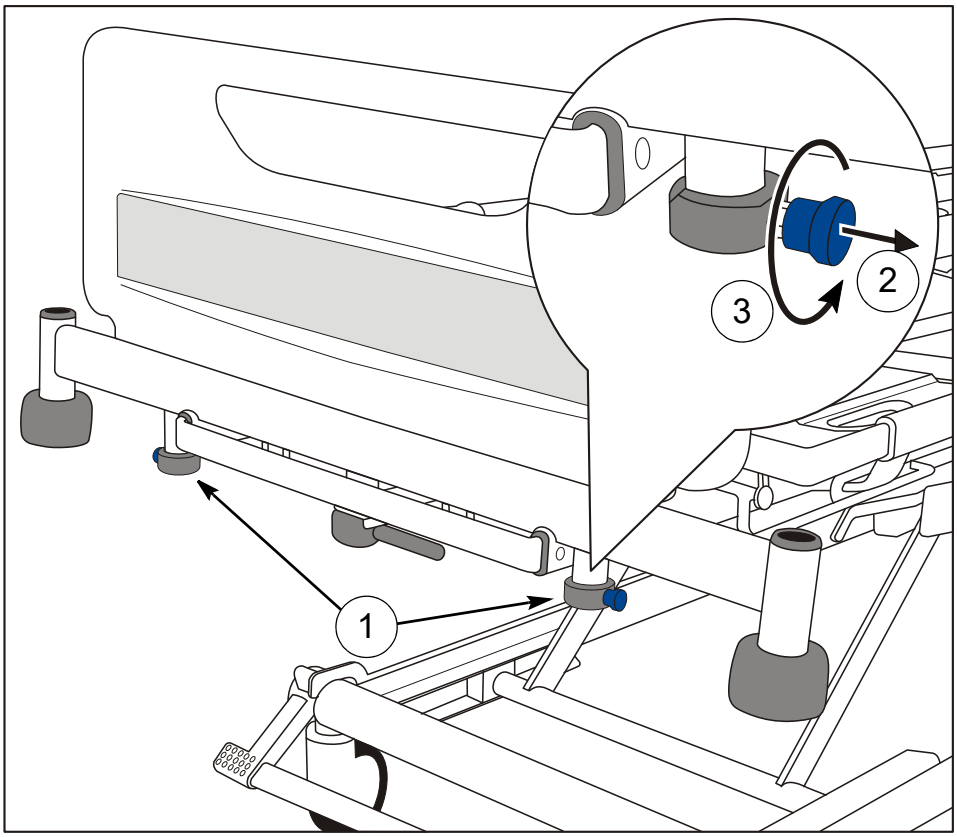

锁定脚踏板 （脚端展示的例子）

在更换病床上的床板后，旋转搭扣直到它们弹回到锁定位置。

调整床垫平台

警告

只需一按即可启动控制。为预防床垫平台意外移动，请避免倚靠在侧护栏并保持床周围设备处于可控范围内。

操作时，请勿将氧气瓶或其他障碍物留在床架下，以免造成潜在的损坏或伤害。

由患者和护理人员来控制使用，内置到头端侧护栏。这些可以操作病床的基本功能。如果患者较难控制侧护栏，可以配备选用的分离式手持控制器。

护理控制面板仅能由护理人员使用，内置到脚端侧护栏内。这样可以全面控制所有病床功能。

以下几页分别介绍了患者和护理人员控制面板及护理控制面板 (ACP) 的功能。

调整床垫平台：按住相应的按钮直到病床达到所需的位置。床垫平台会持续移动直到松开按钮或达到活动范围。

注意
如果在按下按钮时警告声 （蜂鸣音）响起，这表明病床正在使用备用电池工作 — 请参阅第 94 页上的**备用电池**部分。

注意
如果按住某按钮超过 90 秒，其功能会自动禁用，直到解锁按钮。然后必须根据第 92 页上的**功能锁定**部分的说明对其功能进行解锁。

患者控制面板 患者控制面板位于所有头端侧护栏的内侧。

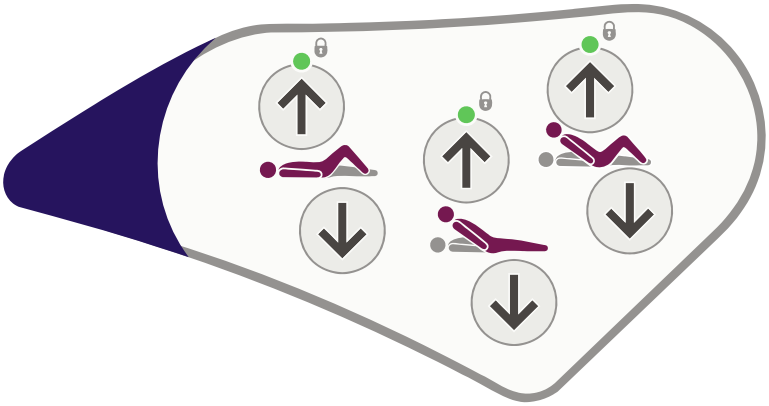

患者控制面板 （左侧）

> **警告**
>
> **护理人员应向患者说明如何使用这些控制器。**

护理人员控制面板 护理人员控制面板位于所有头端侧护栏的外侧。

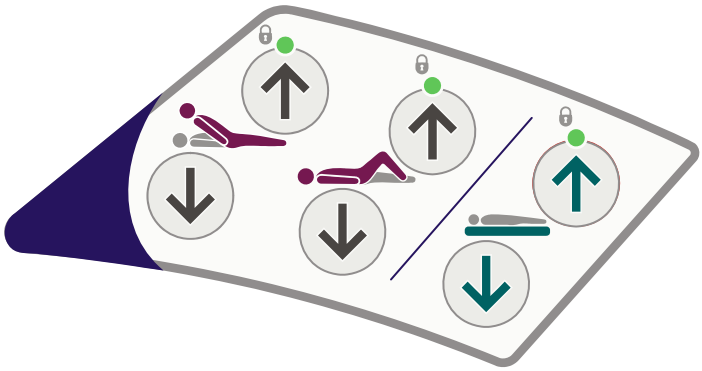

护理人员控制 （患者右手边）

大腿板

这些按钮用于升高和降低大腿板。

第一次从水平位置升起大腿板时，小腿板将处于 Fowler 体位（呈向下角度）。

要将小腿板改为小腿水平抬升体位，请参阅第 93 页上的**调整小腿体位**部分。

背板角度

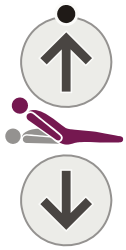

这些按钮用于升高和降低背板。

Bio-Contour

Bio-Contour up 按钮用于同时抬升背板和大腿板，使患者处于正坐姿势；大腿板升高可防止患者从病床滑下。

Bio-Contour down 按钮可将床垫平台返回水平位置。

床垫平台高度

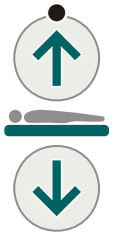

这些按钮用于升高和降低床垫平台。

当床垫平台降低到地面上方 38cm* 时，它将暂停，然后继续降低，直到达到最低高度。

（* 采用 150mm 脚轮的病床为 40cm）

警告

病床达到最低高度时，床下的空隙将减少。不要让您的脚进入侧护栏下面的区域，在使用患者移位机或类似设备时要格外小心。

操作时，请勿将氧气瓶或其他障碍物留在床架下，以免造成潜在的损坏或伤害。

患者手持控制器 （可选）

此手持设备上的控制器与侧护栏上的操作方式相同 （请参见第 88 页）。

警告

将手持控制器通过后面的夹子存放在侧护栏上；这样有助于防止意外操作控制器。

护理人员应向患者说明如何使用手持控制器。

注意，不要将手持控制器电缆挤压或卡夹到病床的移动部件之间。

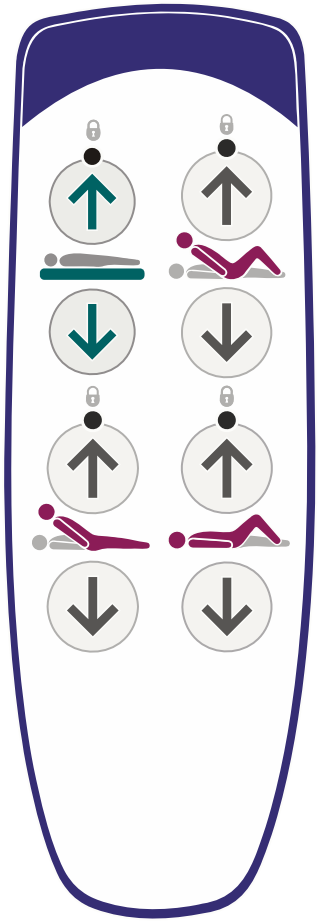

患者手持控制器

注意
有些病床型号的患者手持控制器没有调节床垫平台高度、背板或大腿板功能。

护理控制面板 (ACP)

护理控制面板位于所有尾部侧护栏的外板上。床左侧和右侧的护理控制面板有不同的按钮布局。此外，护理控制面板 (ACP) 可以安装在病床的脚端，或者夹在尾板上，也可以使用附件插孔里的护理控制面板 (ACP) 支架 (ENT-ACC11)。脚端安装的护理控制面板 (ACP) 与右侧导轨安装的护理控制面板 (ACP) 具有相同的按钮布局。

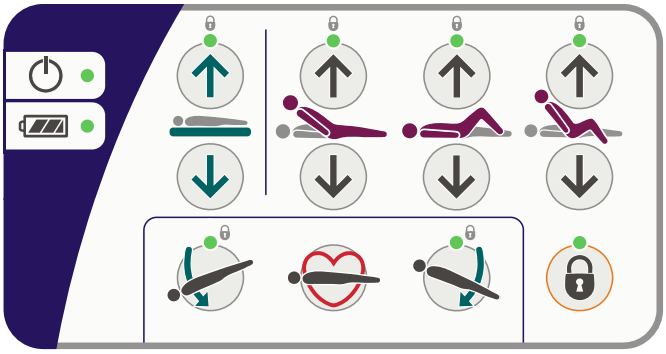

护理控制面板 （患者右手边）

电源接通指示灯 — 病床连接到电源时亮起。

电池指示灯 — 请参阅第 94 页上的**备用电池**部分。

床垫平台高度

这些按钮用于升高和降低床垫平台。

当床垫平台降低到地面上方 38cm* 时，它将暂停，然后继续降低，直到达到最低高度。

（* 采用 150mm 脚轮的病床为 40cm）

警告

病床达到最低高度时，床下的空隙将减少。不要让您的脚进入侧护栏下面的区域，在使用患者移位机或类似设备时要格外小心。

操作时，请勿将氧气瓶或其他障碍物留在床架下，以免造成潜在的损坏或伤害。

靠背

这些按钮用于升高和降低背板。

在达到水平线之上约 30º 后，背板将暂停。

大腿板

这些按钮用于升高和降低大腿板。

第一次从水平位置升起大腿板时，小腿板将处于 Fowler 体位（呈向下角度）。

要将小腿板改为小腿水平抬升体位，请参阅第 93 页上的**调整小腿体位**部分。

Auto-Chair

Auto-Chair up 按钮同时升起背板和大腿板，当背板达到 45º 时暂停。继续按住向上按钮，将床垫平台的脚端降低到座椅位置。

如果靠背板的角度大于 45º，则会回归到 45º 的位置，以预防患者前倾。

Auto-Chair down 按钮可将床垫平台返回平直位置。

倾斜角度

该按钮用来降低床垫平台的头端 （头低脚高体位）。

该按钮用来降低床垫平台的脚端 （头高脚低位）。

注意 从倾斜体位返回时，床垫平台将在水平 （无倾斜）位置暂停。

心肺复苏术 *(CPR)* 体位

如果患者发生心搏骤停，请按住心肺复苏术 (CPR) 按钮。这会将床垫平台放平 （如有必要可降低），以便做心肺复苏术。

心肺复苏术 (CPR) 按钮能够撤消功能锁定设置。

功能锁定

功能锁定可以用来阻止控件操作，例如，不慎移动床垫平台可能会伤害患者。

要锁定 （禁止）或解锁 （允许）相应功能：

按下功能锁定按钮。按钮上方的指示灯将亮起。

按下需要锁定或解锁的功能相对应的按钮。每个功能上方的指示灯表示其状态：

亮起 = 功能已锁定
熄灭 = 功能已解除锁定。

当锁定或解锁相应功能后，按下锁定按钮或等待五秒钟。五秒钟后，功能锁定按钮上方的指示灯将熄灭，而且锁定设置得到保存。

注意
在锁定某项功能时，任何相关功能会被自动禁用，例如锁定背板会同时禁用 Bio-Contour 和 Auto-Chair 功能。

注意
如果病床断开电源，功能锁定设置会保留。

调整小腿位置

升起大腿板时，可以将小腿板手动更改为小腿水平抬升体位。握住小腿部位的床架。向上抬起小腿垫板 (**1**) 直到其锁定 (**2**)。

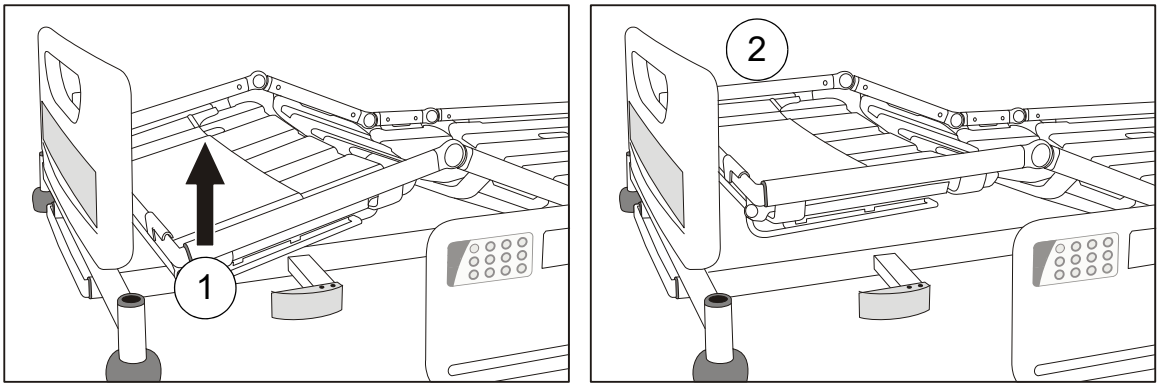

从 Fowler 体位 （左）更改为水平体位

要将小腿板返回到 Fowler 体位：

使用患者手持控制器或护理控制面板 (ACP) 将大腿部位降低到水平位置；然后再次升起大腿板。

警告

在升起小腿板时应小心。应遵守当地的手动操作规定。

备用电池

注意事项

为了确保电池完全充电并防止电池受损，在正常使用期间应始终将病床连接到电源。

备用电池仅供短期使用。使用电池长时间为病床供电会缩短电池使用寿命。

当病床与电源断开连接，或者出现紧急情况但没有电源可用时，可以使用备用电池短时间为病床供电。

电池的充电程度如下所示：

如果在操作病床时发出间歇警告音（哔哔哔声），电池电量为 75% 到 100%。

在这种情况下可以使用所有病床功能。

如果在操作病床时发出连续警告音，电池电量为 10% 到 75%。

在这种情况下可以使用所有病床功能。

如果护理控制面板 (ACP) 电池指示灯亮起为红色，电池电量低于 10% 。

在这种情况下，所有功能均被锁定。

备用电池充电

将病床连接电源为电池充电。在电池完全耗尽时，请容许至少 8 个小时的充电。

当电池充电时，护理控制面板 (ACP) 电池指示灯呈黄色。在电池完全充电后指示灯将熄灭。

警告

长时间不为电池充电会缩短电池使用寿命。

必须使用内置充电器为电池充电。切勿另外使用充电器或者电源。

备用电池充电时，必须保持通风。切勿遮盖电池或在其周围放置障碍物。

低功率模式

只有床与电源断开连接时，才会进入低功率模式，以保持电池余量。这种情况下，床下灯和控制面板指示器将处于关闭状态。

按任意控制键，床将停止低功率模式。按下控制按钮 2 分钟后，即重新接通电源。

占空比锁定

连续使用可能会超过病床的电气系统的占空比，导致按钮上方的指示灯闪烁。30 秒之后，指示灯会亮起，所用功能将被锁定。

如果发生这种情况，请等待至少 18 分钟，然后遵照第 92 页的 “ 功能锁定 ” 部分中给出的解锁步骤操作。

警告

在开始任何清洁或保养前，请切断病床的电源。如果没有在护理控制面板 (ACP) 上锁定功能，病床仍可通过电池供电继续运作。

床垫平台板

床垫平台的四个部分 （背板、坐板、大腿板和小腿板）可以通过向上拉动从床垫平台架拆下。

提起小腿延长板 (**1**) ，然后拆下小腿板 (**2**)。

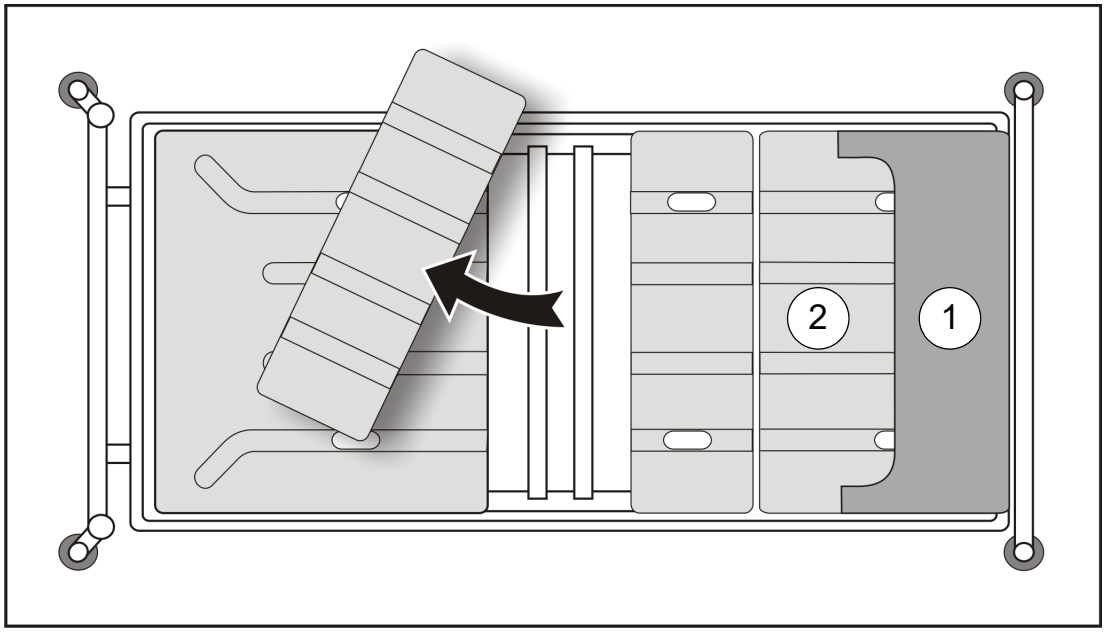

床垫平台板 （俯视图）

要放回每个部分，应确保在床垫平台架上正确定位，然后牢固下压，直到它啮合到位。

将小腿延长板 (**1**) 夹到床垫平台架的末端，以将其放回。

排污

警告

切勿使电源插头或电源线潮湿。

注意
这些说明也适用于附件，但不适用于床垫。有关吊带和手柄信息，请参阅本产品随附的制造商说明。

病床应每星期予以清洁和消毒，而且在新患者使用病床前也需进行清洁和消毒。

清洗

从病床拆下床垫和所有附件。

应将头板 / 尾板和床垫平台板从病床拆下来进行清洁。

穿着适当防护服，使用温水浸湿的一次性抹布和中性清洗剂，清洁所有表面。

先清理床的上面部分并沿着所有水平表面进行。有条理由高向低清洁床体，最后清洗脚轮。要格外注意清洁可能积攒灰尘或污物的区域。

用浸有净水的新一次性布擦拭，并用一次性纸巾擦干清洁过的表面。

等一段时间让清洁部分晾干，然后再放回床垫。

消毒

在按照上述说明清洁病床后，使用浓度为百万分之 1,000 (0.1%) 有效氯的二氯异氰尿酸钠 (NaDCC) 擦洗所有的表面。

如果沾有体液，如血液，二氯异氰尿酸钠 (NaDCC) 的浓度应增大到百万分之 10,000 (1%) 有效氯。

使用其他消毒剂

Arjo 建议使用二氯异氰尿酸钠 (NaDCC) 作为消毒剂，原因在于其有效、稳定且酸碱度比较中性。医疗机构中使用许多其他消毒剂， Arjo 无法一一测试它们来确定其是否可能影响病床的外观或性能。

如果机构规定使用 NaDCC 之外的消毒剂 （如稀释漂白水或双氧水），应谨慎使用并遵照制造商的说明。

注意事项

切勿使用磨蚀性化学品或擦洗垫或者含苯酚的消毒剂。

切勿采用喷流清洁或通道式清洗机。

切勿清除驱动器驱动活塞上的油脂。

预防性维护

本产品在使用过程中会发生磨损和裂纹。为确保其性能继续符合出厂时规格，应按照所给时间间隔执行预防性维护操作。

警告

本列表列举了建议预防性维护的最低限度。当本产品被重度使用或者用于恶劣的环境中，或在当地法规要求的情况下，应进行更频繁的检查。

未能执行这些检查，或者在发现问题后继续使用本产品，可能会危害患者和护理人员的安全。预防性维护可以帮助预防事故。

注意
患者在使用产品时，不能对产品进行保养和维护。

需由护理人员进行相关操作。	每天	每周一次
检查侧护栏的状况	✓	
目测脚轮		✓
检查病床两侧的手动心肺复苏术 (CPR) 解锁手柄的操作		✓
目测电源线和插头		✓
对所有病床电动定位功能（背板、高度、倾斜等）进行完全测试		✓
检查患者控制，护理人员控制，以及护理控制面板的工作情况		✓
检查床垫有无损坏和液体浸入		✓
检查吊杆、吊带和手柄 （可选）	✓	

如果有任何检查的结果不符合要求，请联系 Arjo 或授权维修代理。

警告

以下操作必须由经过适当培训和合格的人员执行。如果不这样做，可能会导致人身伤害或者产品不安全。

由具备资格人员执行的操作	每年
检查当施加最大头高脚低位倾斜度时，床单更换延伸架 （床单架）（可选）是否保持在闭合位置	✓
根据第 101 页上的**电池测试**部分的说明，检查病床能否使用备用电池正常工作	✓
检查脚轮能否正常工作，特别注意制动和转向功能	✓
大腿位置升高时，确保小腿部位转为福勒卧姿。	✓
检查当手动升起时，小腿板的闩锁在水平位置是否牢固卡合	✓
检查病床延长段是否在所有三个位置都牢固锁紧	✓
检查电源线和电源插头，如果损坏，更换整个组件；切勿使用可重接电线的插头	✓
检查所有可触及的软电缆是否出现损坏或退化	✓
查看所有可触及螺母、螺栓和其他紧固件是否到位并正确拧紧	✓
检查装配到病床的所有附件，要特别注意紧固件和移动部件	✓

电池测试

通过执行以下测试，检查备用电池的状况。

1. 切断病床的电源

2. 将床垫平台升高到最高限度 – 忽略电池的警告音。

3. 将靠背垫和大腿垫升高到最高限度。

4. 按住心肺复苏术 (CPR) 按钮。床垫平台将移动到水平的中等高度位置。

5. 将床垫平台降低到最低位置。

6. 进行最大限度的头低脚高位倾斜度 （垂头仰卧姿势）。

7. 将床垫平台回复到水平位置。施加最大头高脚低位倾斜度（垂脚仰卧姿势）。

如果这个测试没有成功完成，请将病床连接电源给电池充电至少 8 小时，然后再次进行测试。如果病床仍然无法正常运行，请联系 Arjo 或者授权维修代理。

为了保持最佳性能，应每隔四年由授权维修代理更换备用电池。

故障排除

如果设备无法正常运行，请参阅以下建议的一些简单的检查和纠正措施。如果这些步骤未能解决问题，请联系 Arjo 或者授权维修代理。

故障表现	可能原因	措施
使用病床时发出哔哔声	病床正使用备用电池工作	检查电源线是否插上，电源是否正常 检查电源插头中的保险丝 （如果已安装）
一项或多项病床功能失效	护理控制面板上锁定了功能	在护理控制面板上解锁功能
病床很难操控	制动器踏板处于 “ 转向 ” 位置	将制动踏板调到 “ 自由 ” 位置
护理控制面板上的所有指示灯亮起或闪烁	超过了电气系统的工作循环	请参阅第 95 页上的**占空比锁定**部分
床垫平台不能被降低	高度控制软件出现错误	将床垫平台升高到最大高度以重新设置软件
电池几乎耗尽之后，连接主电源后所有功能仍然保持锁定状态 （连接主电源之前，护理控制面板 (ACP) 电池指示器为红色）	所有控制器上的功能因为处于电力不足状态而被锁定	要解锁所有的功能，请连接电源，然后接连按下两次 “ 功能锁定 ” 按钮，之后选择功能进行解锁
病床移动功能按钮无响应	控制软件出现错误	断开并重新连接主电源，消除病床软件错误

故障指示

病床控制软件通过护理控制面板 (ACP) 上闪烁的指示灯来显示电气系统中的问题。如果您遇到以下任何现象，请联系 Arjo 或者授权维修代理。

指示	可能原因
护理控制面板 (ACP) 床垫平台高度和头低脚高位指示灯闪烁	高度驱动器故障（脚端）
护理控制面板 (ACP) 床垫平台高度和头高脚低位指示灯闪烁	高度驱动器故障（头端）
护理控制面板 (ACP) 背板指示灯闪烁	背板驱动器故障
护理控制面板 (ACP) 大腿板指示灯闪烁	大腿板驱动器故障
床垫平台高度、头朝下倾斜、背板和大腿板指示灯闪烁。	控制单元故障

产品使用寿命

本设备的使用寿命通常是十 (10) 年。使用寿命的定义如下：遵照使用说明书中的要求，在正常使用条件下工作并得到维护的情况下，产品保持指定性能和安全性的持续时间。

6. 配件和电缆

以下列表中给出了病床建议使用的配件。请注意，有些附件并非在所有国家都有售。

附件	产品编号
带有吊带和手柄的吊杆	ENT-ACC01
输液吊杆	ENT-ACC02
静脉输液架铁钩	ENT-ACC02 SH
带有吊带和手柄的三节式吊杆	ENT-ACC03
斜角输液吊杆	ENT-ACC04
骨科用架	ENT-ACC05
注射泵架	ENT-ACC07
氧气瓶架（用于 CD、D、E 以及 PD 型号的气缸）	ENT-ACC08
小牵引组件	ENT-ACC10
护理控制面板固定器	ENT-ACC11
静脉输液架额外的挂钩	ENT-ACC14
存放电源线的挂钩（随病床提供）	ENT-ACC15
氧气瓶固定器（用于 B5 氧气瓶）	ENT-ACC18
尿壶支架	ENT-ACC19
高承重型输液吊杆	ENT-ACC24
传感器安装杆	ENT-ACC26
头端牵引组件	ENT-ACC32
ITU头端推杆（头端）	ENT-ACC34
Oxylog® 设备支架	ENT-ACC40
便盆支架	ENT-ACC56
氧气瓶支架	ENT-ACC58
监护仪架	ENT-ACC64
安装到吊杆的输液袋固定器	ENT-ACC65
足端填充板	ENT-ACC66
尿壶支架	ENT-ACC69
输液吊杆	ENT-ACC71
监护仪架	ENT-ACC74
集成输液吊杆	ENT-ACC89

Oxylog 是 Dräger Medical 的注册商标。

编号	名称	电缆长度 (m)	是否屏蔽	注释
1	电缆	2.895	否	/

7. 技术数据

基本信息	
安全承重	250kg
患者最大重量	185kg
产品重量（近似值）	150 公斤
噪音	约 50dB
工作电压	
温度	10°C 至 40°C
相对湿度	30°C 条件下 20% 至 90%，非冷凝
大气压力	700hPa 至 1060hPa
电气数据	
输入功率	最大电流 1.6A，交流电压 230V 50/60Hz 最大电流 1.6A，交流电压 230V 60Hz (KSA) 在交流电压 120V，最大电流 2A 50/60Hz
运行周期	10% (2 分钟开机, 18 分钟关闭)
美国/加拿大安全标准	EN/IEC 60601-1:2005 AMD1:2012 ANSI/AAMI ES60601-1 (2005) AMD 1 (2012) CAN/CSA-C22.2 No. 60601-1:14 IEC60601-2-52:2015
电击防护等级	I 级 B 型
电磁兼容性 (EMC)	符合 IEC 60601-1-2:2014 标准
电位均衡端子	符合 EN 60601-1:2005 AMD1:2012
液体防护等级	IPX4
备用电池	2 x 12V 串联，密封，可充电铅/酸凝胶，1.3Ah

尺寸 （可能出现正常制造公差）	
总长度	
位置 1 （缩短）	224cm
位置 2 （标准）	235cm
位置 3 （延长）	247cm
床内长度	
位置 1 （缩短）	192cm
位置 2 （标准）	203cm
位置 3 （延长）	215cm
总宽度	103cm
床垫平台的高度 （坐板中心到地面）	
采用 125mm 脚轮	32cm-76cm 弧形床板 34cm-78cm 水平床板
采用 150mm 脚轮	34cm-78cm 弧形床板 36cm-80cm 水平床板
头低脚高位倾斜角度	最低 12°
头高脚低位倾斜角度	最低 12°
床垫尺寸 （请参阅第 70 页上的**床垫**部分）	
位置 2 （标准）	202cm x 88cm， 12.5 至 18cm 厚
床垫平台角度	a = 62º （最大值） b = 20º （最大值） c = 16º （最大值） d = 98º （最小值） a b c d
废弃处置	
• 含有电气和电子部件的设备应按照废弃电气和电子设备 (WEEE) 或根据当地或国家法规进行拆卸和回收。 • 产品中的所有电池必须单独回收。应按照国家和地方法规处理电池。 • 床架等部件主要由各种金属材料 （按重量计含有 90% 以上的金属）制成，应作为金属进行回收。	

运输和存储	
小心搬运。请勿摔落。避免触电或猛烈撞击。 本设备应存放在清洁、干燥、通风良好且应满足下列条件的区域：	
温度	-10°C 至 50°C
相对湿度	30°C 条件下 20% 至 90%，非冷凝
大气压力	700hPa 至 1060hPa
注意事项 **如果长时间存放病床，应每隔三个月将其连接到电源并持续 24 小时为备用电池充电，否则备用电池可能将不能使用。**	
符号	
= 250 kg/ 550 lb	安全承重
= 185 kg/ 407 lb	患者最大重量
	交流 (AC)
	注意事项
	请参阅使用说明书
	B 类应用部分 这些应用部分通常为：上部床架部分、病床控制、安全侧护栏、头端和足端挡板
	制造商 / 生产日期
CE	CE 标志表明符合欧洲共同体的统一立法
MD	表示该产品是符合欧盟医疗器械法规 2017/745 的医疗器械

符号 （续）	
	请务必阅读使用说明书
SN	序列号
REF	型号
	废弃电气电子设备 (WEEE) — 切勿将本产品废弃到一般家庭或商业垃圾中
	电位均衡端子
	保护接地（接地线）
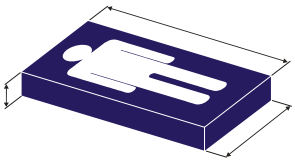	推荐床垫尺寸
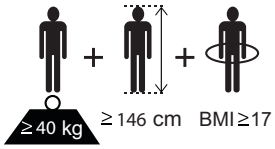	建议患者体型
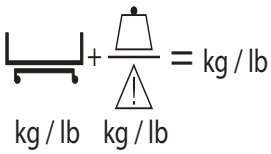	包括设备安全承重在内的总重量
	小腿板水平抬升体位
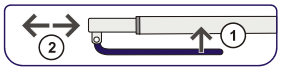	床垫平台延长
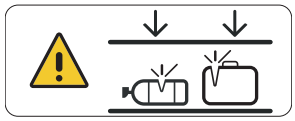	操作时，请勿将氧气瓶或其他障碍物留在床架下方

8. 保修和服务

Arjo 的标准条款和条件适用于所有销售；如有需要可索要该条款副本。这些条款包含保修条款的全部详细信息，但不影响用户的法定权利。

如您有任何有关本产品维修、保养的问题或任何其它问题，请联系您当地的 Arjo 办事处或者经认证的分销商。本手册背面列载了 Arjo 各办事处的列表。

联系 Arjo 咨询服务、备件或附件时，请准备好设备的型号和序列号。

9. 电磁兼容性

床设计为在下表指定的电磁环境中使用。客户或用户应保证在此类环境下使用该设备。如果不遵守表内所列要求，可能导致产品无法正常工作。

便携式和移动频率通信设备可能影响 E8000X 的正常使用，请在建议的电磁环境下使用 E8000X。

注意事项

使用未经制造商推荐的零配件可导致设备的辐射性增加以及耐腐蚀性降低，从而影响其性能。产品使用说明书中包含了经过批准审核的附件列表。

如果使用本设备时需要靠近其它电气设备，必须在使用前检查设备正常运行情况。

指南和制造商声明 — 电磁发射		
床设计为在下面指定的电磁环境中使用。客户或用户应保证在此类环境下使用该设备。		
发射试验	**符合性**	**电磁环境 — 指南**
射频发射 GB 4824	组别 1	仅将射频能量用于内部功能。因此，其射频辐射非常低，不太可能对附近的电子设备产生任何干扰。
射频发射 GB 4824	Class A	该设备适于在非家用和与家用住宅公共低压供电网不直接连接的所有设施中。
谐波发射 GB 17625.1	Class A	
电压波动 / 闪烁发射 GB 17625.2	符合要求	

指南和制造商声明 — 电磁抗扰度			
床设计为在下面指定的电磁环境中使用。客户或用户应保证在此类环境下使用该设备。			
抗扰度试验	**IEC 60601 试验电平**	**符合电平**	**电磁环境 — 指南**
静电放电 (ESD) GB/T 17626.2	± 6 kV 接触放电 ± 8 kV 空气放电	± 6 kV 接触放电 ± 8 kV 空气放电	地板应为木质、水泥或瓷砖。如果地板上覆盖合成材料，相对湿度应至少为 30%。
电快速瞬变脉冲群 GB/T 17626.4	± 2 kV 对电源线 ± 1 kV 对输入 / 输出线	± 2kV 不适用	网电源应具有典型的商业或医院环境中使用的质量。
浪涌 GB/T 17626.5	± 1 kV 线对线 ± 2 kV 线对地	±1kV ± 2kV	网电源应具有典型的商业或医院环境中使用的质量。
电源输入线上电压暂降、短时中断和电压变化 GB/T 17626.11	70% U_T，持续 25 周期 （在 U_T 上， 30% 的暂降） 40% U_T，持续 5 周期 （在 U_T 上， 60% 的暂降） <5% U_T，持续 0.5 周期 （在 U_T 上， >95% 的暂降） <5% U_T，持续 5s （在 U_T 上， >95% 的暂降）	70%，输入电压 500ms 40%，输入电压 100ms <5%，输入电压 10ms <5%，输入电压 5000ms	网电源应具有典型的商业或医院环境中使用的质量。 如果用户需要在电源中断期间继续进行操作，建议使用不间断电源或电池供电。
工频磁场 (50/60Hz) GB/T 17626.8	3A/m	3A/m	工频磁场应具有在典型的商业或医院环境中典型场所的工频磁场水平特性。
注意　U_T 指施加试验电压前的交流网电压。			

指南和制造商声明 — 电磁抗扰度			
床设计为在下面指定的电磁环境中使用。客户或用户应保证在此类环境下使用该设备。			
抗扰度试验	**IEC 60601 试验电平**	**符合电平**	**电磁环境 — 指南**
射频传导 GB/T 17626.6 射频辐射 GB/T 17626.3	3V rms 150kHz 到 80MHz 3V/m 80MHz 到 2.5GHz	3V 3V/m	便携式和移动式射频通信设备不应比推荐的隔离距离更靠近床的任何部分使用，包括电缆。该距离应由与发射机频率相应的公式计算。 **推荐的间隔距离** $d = 1.2\sqrt{P}$ $d = 1.2\sqrt{P}$ 80MHz 到 800MHz $d = 2.3\sqrt{P}$ 800MHz 到 2.5GHz *P* — 根据发射机制造商提供的发射机最大额定输出功率，单位为瓦特 (W)； *d* — 推荐的隔离距离，单位为米 (m)。 固定式射频发射机的场强通过对电磁场所勘测 [a] 来确定，在每个频率范围 [b] 都应比符合电平低。 在标记下列符号的设备附近可能出现干扰。
注 1 在 80 MHz 和 800 MHz 频率点上，采用较高频段的公式。 注 2 这些指南可能不适合所有的情况，电磁传播受建筑物、物体及人体的吸收和反射的影响。			
a 固定式发射机，诸如：无线（蜂窝 / 无绳）电话和地面移动式无线电的基站、业余无线电、调幅和调频无线电广播以及电视广播等，其场强在理论上都不能准确预知。为评定固定式射频发射机的电磁环境，应考虑电磁场所的勘测。如果测得床所处场所的场强高于上述适用的射频符合电平，则应观测床以验证其能正常运行。如果观测到不正常性能，则补充措施可能是必需的，比如重新调整床的方向或位置。 b 在 150 kHz ～ 80 MHz 整个频率范围，场强应低于 3 V/m。			

便携式及移动式射频通信设备和床之间的推荐隔离距离			
床预期在射频辐射骚扰受控的电磁环境中使用。依据通信设备最大额定输出功率，购买者或使用者可通过下面推荐的维持便携式及移动式射频通信设备（发射机）和床之间最小距离来防止电磁干扰。			
发射机的最大额定输出功率 W	**对应发射机不同频率的隔离距离 m**		
	150kHz 到 80MHz $d = 1.2\sqrt{P}$	**80MHz 到 800MHz** $d = 1.2\sqrt{P}$	**800MHz 到 2.5GHz** $d = 2.3\sqrt{P}$
0.01	0.12	0.12	0.23
0.1	0.38	0.38	0.73
1	1.2	1.2	2.3
10	3.8	3.8	7.3
100	12	12	23
对于上表未列出的发射机最大额定输出功率，推荐隔离距离 d，以米 (m) 为单位，可用相应发射机频率栏中的公式来确定，这里 P 是由发射机制造商提供的发射机最大额定输出功率，以瓦特 (W) 为单位。 注 1　在 80 MHz 和 800 MHz 频率点上，采用较高频范围的公式。 注 2　这些指南可能不适合所有的情况，电磁传播受建筑物、物体及人体的吸收和反射的影响。			

此处空白

AUSTRALIA
Arjo Australia
Building B, Level 3
11 Talavera Road
Macquarie Park, NSW, 2113,
Australia
Phone: 1800 072 040

BELGIQUE / BELGIË
Arjo Belgium
Evenbroekveld 16
9420 Erpe-Mere
Phone: +32 (0) 53 60 73 80
Fax: +32 (0) 53 60 73 81
E-mail: info.belgium@arjo.com

BRASIL
Arjo Brasil Equipamentos Médicos Ltda
Rua Marina Ciufuli Zanfelice, 329 PB02
Galpão - Lapa
São Paulo – SP – Brasil
CEP: 05040-000
Phone: 55-11-3588-5088
E-mail: vendas.latam@arjo.com
E-mail: servicios.latam@arjo.com

CANADA
Arjo Canada Inc.
90 Matheson Boulevard West
Suite 300
CA-MISSISSAUGA, ON, L5R 3R3
Tel/Tél: +1 905 238 7880
Free: +1 800 665 4831 Institutional
Free: +1 800 868 0441 Home Care
Fax: +1 905 238 7881
E-mail: info.canada@arjo.com

ČESKÁ REPUBLIKA
Arjo Czech Republic s.r.o.
Na Strzi 1702/65
140 00 Praha
Czech Republic
Phone No: +420225092307
e-mail: info.cz@arjo.com

DANMARK
Arjo A/S
Vassingerødvej 52
DK-3540 LYNGE
Tel: +45 49 13 84 86
Fax: +45 49 13 84 87
E-mail:
dk_kundeservice@arjo.com

DEUTSCHLAND
Arjo GmbH
Peter-Sander-Strasse 10
DE-55252 MAINZ-KASTEL
Tel: +49 (0) 6134 186 0
Fax: +49 (0) 6134 186 160
E-mail: info-de@arjo.com

ESPAÑA
ARJO IBERIA S.L.
Poligono Can Salvatella
c/ Cabanyes 1-7
08210 Barberà del Valles
Barcelona - Spain
Telefono 1: +34 900 921 850
Telefono 2: +34 931 315 999

FRANCE
Arjo SAS
2 Avenue Alcide de Gasperi
CS 70133
FR-59436 RONCQ CEDEX
Tél: +33 (0) 3 20 28 13 13
Fax: +33 (0) 3 20 28 13 14
E-mail: info.france@arjo.com

HONG KONG
Arjo Hong Kong Limited
Room 411-414, 4/F, Manhattan Centre,
8 Kwai Cheong Road, Kwai Chung, N.T.,
HONG KONG
Tel: +852 2960 7600
Fax: +852 2960 1711

ITALIA
Arjo Italia S.p.A.
Via Giacomo Peroni 400-402
IT-00131 ROMA
Tel: +39 (0) 6 87426211
Fax: +39 (0) 6 87426222
E-mail: Italy.promo@arjo.com

MIDDLE EAST
Arjo Middle East FZ-LLC
Office 908, 9th Floor,
HQ Building,North Tower,
Dubai Science Park,
Al Barsha South
P.O Box 11488, Dubai,
United Arab Emirates
Direct +971 487 48053
Fax +971 487 48072
Email: Info.ME@arjo.com

NEDERLAND
Arjo Nederland BV
Biezenwei 21
4004 MB TIEL
Postbus 6116
4000 HC TIEL
Tel: +31 (0) 344 64 08 00
Fax: +31 (0) 344 64 08 85
E-mail: info.nl@arjo.com

NEW ZEALAND
Arjo Ltd
34 Vestey Drive
Mount Wellington
NZ-AUCKLAND 1060
Tel: +64 (0) 9 573 5344
Free Call: 0800 000 151
Fax: +64 (0) 9 573 5384
E-mail: nz.info@Arjo.com

NORGE
Arjo Norway AS
Olaf Helsets vei 5
N-0694 OSLO
Tel: +47 22 08 00 50
Faks: +47 22 08 00 51
E-mail: no.kundeservice@arjo.com

ÖSTERREICH
Arjo Austria GmbH
Lemböckgasse 49 / Stiege A / 4.OG
A-1230 Wien
Tel: +43 1 8 66 56
Fax: +43 1 866 56 7000

POLSKA
Arjo Polska Sp. z o.o.
ul. Ks Piotra Wawrzyniaka 2
PL-62-052 KOMORNIKI (Poznań)
Tel: +48 61 662 15 50
Fax: +48 61 662 15 90
E-mail: arjo@arjo.com

PORTUGAL
Arjo em Portugal
MAQUET Portugal, Lda.
(Distribudor Exclusivo)
Rua Poeta Bocage n.º 2 - 2G
PT-1600-233 Lisboa
Tel: +351 214 189 815
Fax: +351 214 177 413
E-mail: Portugal@arjo.com

SUISSE / SCHWEIZ
Arjo Switzerland AG
Fabrikstrasse 8
Postfach
CH-4614 HÄGENDORF
Tél/Tel: +41 (0) 61 337 97 77
Fax: +41 (0) 61 311 97 42

SUOMI
Arjo Scandinavia AB
Riihitontuntie 7 C
02200 Espoo
Finland
Puh: +358 9 6824 1260
E-mail: Asiakaspalvelu.finland@arjo.com

SVERIGE
Arjo International HQ
Hans Michelsensgatan 10
SE-211 20 MALMÖ
Tel: +46 (0) 10 494 7760
Fax: +46 (0) 10 494 7761
E-mail: kundservice@arjo.com

UNITED KINGDOM
Arjo UK and Ireland
Houghton Hall Park
Houghton Regis
UK-DUNSTABLE LU5 5XF
Tel: +44 (0) 1582 745 700
Fax: +44 (0) 1582 745 745
E-mail: sales.admin@arjo.com

USA
Arjo Inc.
2349 W Lake Street Suite 250
US-Addison, IL 60101
Tel: +1 630 307 2756
Free: +1 80 0 323 1245 Institutional
Free: +1 800 868 0441 Home Care
Fax: +1 630 307 6195
E-mail: us.info@arjo.com

JAPAN
Arjo Japan K.K.
東京都港区虎ノ門三丁目7 番8 号
ランディック第2 虎ノ門ビル9 階
Tel: +81 (0)3-6435-6401
Fax: +81 (0)3-6435-6402
E-mail: info.japan@arjo.com

产品名称:	电动病床
型号:	见标签
注册证编号:	国械注进20182150175
产品技术要求编号:	国械注进20182150175
生产日期:	见标签

产品组成：该病床由脚轮、床架、侧护栏、床垫支撑平台以及床头尾板组成，并带有CPR释放手柄、IndiGo直观驱动辅助（选配）、第5脚轮（选配）、电源线以及患者/护理操作控制面板。

注册人/生产企业名称:	ArjoHuntleigh AB 而久亨特利瑞典
注册人/生产企业住所:	Hans Michelsensgatan 10, 211 20 Malmö, Sweden
注册人/生产企业联系方式:	+46(0)10 335 45 00
生产地址:	ul.Ks.Wawrzyniaka 2, 62-052 Komorniki, Poland

售后服务单位:	佊捷祐（苏州）医疗设备贸易有限公司
代理人名称:	佊捷祐（苏州）医疗设备贸易有限公司
代理人住所:	苏州工业园区方洲路158号
代理人联系方式:	400-087-2882

修订日期: 2022年10月13日

At Arjo, we are committed to improving the everyday lives of people affected by reduced mobility and age-related health challenges. With products and solutions that ensure ergonomic patient handling, personal hygiene, disinfection, diagnostics, and the effective prevention of pressure ulcers and venous thromboembolism, we help professionals across care environments to continually raise the standard of safe and dignified care. Everything we do, we do with people in mind.

ArjoHuntleigh AB
Hans Michelsensgatan 10
211 20 Malmö, Sweden
www.arjo.com